User Manual

Model 3100 Series

Forma Series II Water Jacket CO_2 Incubator

Operating and Maintenance Manual 7053110 Rev. 8

Visit us online to register your warranty
www.thermoscientific.com/labwarranty

Thermo
SCIENTIFIC

Table 1. Single Chamber Models

Model	CO2 Sensor*	O2	Voltage **	Temp Max
3110	T/C	No	115	55C
3111	T/C	No	230	55C
3120	IR	No	115	50C
3121	IR	No	230	50C
3130	T/C	Yes	115	45C
3131	T/C	Yes	230	45C
3140	IR	Yes	115	45C
3141	IR	Yes	230	45C

*T/C is a thermal conductivity sensor.
IR is an infrared sensor.

**All units are 50/60 Hz.

MANUAL NUMBER 7053110

REV	ECR/ECN	DATE	DESCRIPTION	By
8	ECNM-002105	03/09/23	Updated assembly drawings in page 8-4, 8-5, 8-6 and 8-7.	TFI
7	ECNM-002047	07/15/22	Updated the Shelf count in page 7-2.	TFI
6	ECNM-001240	10/27/21	Updated Door alignment step 24 in Section Reversing the Door Swing in page 5-7.	TFI
5	ECNM-001514	06/04/21	Added EMC statements in preface page iv.	TFI
4	ECNM-000906	02/22/21	Replaced part number 400202 with 400218 in page 8-1, updated Assembly drawing in page 8-4 and Electrical drawing in page 9-1 to 9-6.	TFI
3	ECNM-001141	09/29/2020	Added Tubing Inspection details to Preventive Maintenance section in page 4-5.	TFI
2	40087/IN-4743	7/28/16	Changed label on remote alarm artwork to note - pg 6-1	ccs
1	40421	11/2/15	Added risk assessment information	ccs
0	27988/IN-4478	4/7/14	Release 7 - Original	ccs

Important Read this operating manual. Failure to read, understand and follow the instructions in this manual may result in damage to the unit, injury to operating personnel, and poor equipment performance. ▲

Warning All internal adjustments and maintenance must be performed by qualified service personnel. ▲

Material in this manual is for information purposes only. The contents and the product it describes are subject to change without notice. Thermo Fisher Scientific makes no representations or warranties with respect to this manual. In no event shall Thermo be held liable for any damages, direct or incidental, arising out of or related to the use of this manual.

Intended Use:

The Thermo Scientific Water-jacketed CO_2 incubators listed in this manual are intended to provide an environment with controlled temperature and Carbon Dioxide (CO_2) as well as elevated humidity (RH) for the growth of microbiological samples or mammalian cells for research (FDA Class 1), and IVF and other regulated cell therapy applications (FDA Class 2). Certain models also control Oxygen (O_2) at suppressed levels via the injection of Nitrogen (N_2).

For FDA Class 1 applications, the intended end user is a laboratory / medical professional trained in basic safety and cell culture practices. For FDA Class 2 applications, the intended user is a trained Laboratory Technician whose qualifications include a bachelor's or master'ss degree in chemical, physical, biological, medical technology, clinical or reproductive laboratory science from an accredited institution.

These incubators are designed to be used indoors only and operate 24 hours per day - 7 days per week, but should be shut down regularly to be disinfected to prevent contamination, maintained per the instructions for use, and calibrated to retain optimum system performance.

Non - Intended use:

These incubators are not intended for use by the general public.

These units are not intended for use within the patient environment. These units are not to be used outdoors.

These incubators are not designed to provide O_2 levels greater than 20% and as such should never be connected to O_2 as it is highly flammable in elevated concentrations. These units are not designed to be used with Liquid CO_2 or Liquid N_2. These units should not be used with any flammable or toxic materials.

© 2023 Thermo Fisher Scientific. All rights reserved.

Important operating and/or maintenance instructions. Read the accompanying text carefully.

Potential electrical hazards. Only qualified persons should perform procedures associated with this symbol.

Equipment being maintained or serviced must be turned off and locked off to prevent possible injury.

Asphyxiation Hazard Warning. High concentrations of CO_2 and N_2 can displace oxygen and cause asphyxiation!

Lifting Hazard Warning. The incubator weighs more than 200 lbs (91 kgs). Take adequate safety measures when moving this device.

4-Person Lift. The incubator weighs more than 200 lbs (91 kgs). It is recommended that four persons lift this device together to move it.

WEEE Compliance: Thermo Fisher Scientific has contracted with companies for recycling/disposal in each EU Member State. For further information, send an email to weee.recycle@thermofisher.com.

- ✔ Always use the proper protective equipment (clothing, gloves, goggles, etc.)
- ✔ Always dissipate extreme cold or heat and wear protective clothing.
- ✔ Always follow good hygiene practices.
- ✔ Each individual is responsible for his or her own safety.

EMC

This equipment has been tested and found to comply with the limits for a Class A digital device. Class A covers devices for usage in all establishments other than domestic and that are not directly connected to a low voltage power supply network, which supplies domestic environment.

Consideration for Korea.

EMC Registration is done on this equipment for business use only. It may cause interference when the product would be used in home.
사용자 안내문 이 기기는 업무용 환경에서 사용할 목적으로 적합성평가 를 받은 기기로서 가정용 환경에서 사용하는 경우 전파간섭의 우려가 있 습니다 .

Consideration for EU

This product is intended for use at locations where product is being supplied by separate power network, in most cases supplied from a high or medium voltage transformer, dedicated only for manufacturing plants or similar plants.

FCC Statement

This equipment has been tested and found to comply with the limits for a Class A digital device, pursuant to part 15 of the FCC Rules. These limits are designed to provide reasonable protection against harmful interference when the equipment is operated in a commercial environment. This equipment generates, uses, and can radiate radio frequency energy and, if not installed and used in accordance with the instruction manual, may cause harmful interference to radio communications. Operation of this equipment in a residential area is likely to cause harmful interference in which case the user will be required to correct the interference at his own expense.

Canada Statement:

This ISM device complies with Canadian ICES-001. Cet appareil ISM est conforme à la norme NMB-001 du Canada.

Do You Need Information or Assistance on Thermo Scientific Products?

If you do, please contact us 8:00 a.m. to 6:00 p.m. (Eastern Time) at:

1-740-373-4763	Direct
1-800-438-4851	Toll Free, U.S. and Canada
1-877-213-8051	FAX
http://www.thermofisher.com	Internet Worldwide Web Home Page
service.led.marietta@thermofisher.com	Tech Support Email Address
www.unitylabservices.com	Certified Service Web Page

Our **Sales Support** staff can provide information on pricing and give you quotations. We can take your order and provide delivery information on major equipment items or make arrangements to have your local sales representative contact you. Our products are listed on the Internet and we can be contacted through our Internet home page.

Our **Service Support** staff can supply technical information about proper setup, operation or troubleshooting of your equipment. We can fill your needs for spare or replacement parts or provide you with on-site service. We can also provide you with a quotation on our Extended Warranty for your Thermo Scientific products.

Whatever Thermo Scientific products you need or use, we will be happy to discuss your applications. If you are experiencing technical problems, working together, we will help you locate the problem and, chances are, correct it yourself...over the telephone without a service call.

When more extensive service is necessary, we will assist you with direct factory trained technicians or a qualified service organization for on-the-spot repair. If your service need is covered by the warranty, we will arrange for the unit to be repaired at our expense and to your satisfaction.

Regardless of your needs, our professional telephone technicians are available to assist you Monday through Friday from 8:00 a.m. to 6:00 p.m. Eastern Time. Please contact us by telephone or fax. If you wish to write, our mailing address is:

Thermo Fisher Scientific (Asheville) LLC
401 Millcreek Road, Box 649
Marietta, OH 45750

International customers, please contact your local Thermo Scientific distributor.

Warranty Notes

Information You Should Know Before Requesting Warranty Service

- **Locate the model and serial numbers.** A serial tag is located on the unit itself.
- For equipment service or maintenance, or with technical or special application inquiries, contact Technical Services at 1-800-438-4851 or 1-740-373-4763 (USA and Canada). Outside the USA, contact your local distributor.

Repairs NOT Covered Under Warranty

- **Calibration of control parameters.** Nominal calibrations are performed at the factory; typically ±1°C for temperature, ±1% for gases, and ±5% for humidity. Our service personnel can provide precise calibrations as a billable service at your location. Calibration after a warranty repair is covered under the warranty.
- **Damage resulting from use of improper quality water, chemicals or cleaning agents detrimental to equipment materials.**
- **Service calls for improper installation or operating instructions.** Corrections to any of the following are billable services:

  1) electrical service connection
  2) tubing connections
  3) gas regulators
  4) gas tanks
  5) unit leveling
  6) room ventilation
  7) adverse ambient temperature fluctuations
  8) any repair external to the unit

- **Damage resulting from accident, alteration, misuse, abuse, fire, flood, acts of God, or improper installation.**
- **Repairs to parts or systems resulting from unauthorized unit modifications.**
- **Any labor costs other than that specified during the parts and labor warranty period, which may include additional warranty on CO_2 sensors, blower motors, water jackets, etc.**

Table of Contents

Section 1 Installation and Start-Up 1-1

Name and Description of Parts 1-1
Control Panel Keys, Displays & Indicators 1-2
Control Panel Operation 1-3
Installing the Unit 1-4
Stacking the Incubators 1-5
Installing Access Port Filter 1-7
Preliminary Cleaning 1-7
Installing HEPA Filter 1-8
Installing Air Sample Filter 1-8
Installing Shelves 1-9
Leveling the Unit 1-9
Connecting Unit to Electrical Power 1-10
Filling Water Jacket 1-10
Filling Humidity Pan 1-11
Connecting CO_2 or N_2 (O_2 System) Gas Supply 1-12
Incubator Start-Up 1-14
Setting the Operating Temperature 1-14
Setting the Overtemp Setpoint 1-15
Setting CO_2 Setpoint 1-15
Setting O_2 Setpoint 1-16

Section 2 Calibration 2-1

Calibrating the Temperature 2-1
Temperature Stabilization Periods 2-2
Calibrating T/C CO_2 System 2-2
T/C CO_2 Sensor Stabilization Periods 2-3
Calibrating Infra-Red CO_2 System 2-3
IR CO_2 Sensor Stabilization Times 2-4
Calibrating the O2 System 2-4
O_2 Calibration at 20.7% 2-5
O_2 Offset Calibration 2-6
Calibrating Relative Humidity (RH) 2-6
Relative Humidity Stabilization Times 2-6

Section 3 **Configuration** **3-1**
Turning the Audible Alarm ON/OFF 3-1
New HEPA Filter 3-1
Setting the REPLACE HEPA Filter Reminder 3-2
Setting an Access Code 3-2
Setting Low Temp Alarm Limit 3-3
Setting High Temp Alarm Limit 3-3
Enabling Temp Alarms to Trip Contacts 3-4
Setting Low CO_2 Alarm Limit 3-4
Setting High CO_2 Alarm Limit 3-4
Enabling CO_2 Alarms to Trip Contacts 3-5
Setting New Zero # for T/C CO_2 Sensors 3-5
Setting New Span # for T/C CO_2 Sensors 3-6
Setting a Low RH Alarm Limit 3-7
Enabling RH Alarms to Trip Contacts 3-7
Setting a Low O_2 Alarm Limit 3-7
Setting a High O_2 Alarm Limit 3-8
Enabling O_2 Alarms to Trip Contacts 3-8
Enabling Temp/RH to be Displayed 3-9
Enabling CO_2/O_2 to be Displayed 3-9
Selecting a Primary Tank (Gas Guard) 3-10
Disabling the Gas Guard System 3-10
Setting a RS485 Address (1535 Only) 3-10

Section 4 **Alarms** **4-1**
Inner Door Open Alarm 4-2
Sensor Fault Alarms 4-2

Section 5 **Routine Maintenance** **5-1**
Cleaning the Interior 5-1
Cleaning Cabinet Exterior 5-4
Reversing the Door Swing 5-4
Cleaning Humidity Pan 5-4
Replacing Fuses 5-8
HEPA Filter Maintenance 5-10
Replacing Air Sample Filter 5-10
Replacing Access Port Filter 5-10
Draining Water Jacket 5-10
Adding /Replenishing Rust Inhibitor 5-11
Replacing O_2 Sensor 5-12

Section 6 **Factory Installed Options 6-1**
Remote Alarm Contacts 6-1
Connecting the RS485 Interface (190523) 6-2
Connecting Analog Output Boards 6-3
Connecting CO_2 Gas Supplies 6-5
Gas Guard for CO_2 or N_2 (190640/190642) 6-5
Connecting N_2 Gas Supplies 6-6
De-activating Built-in Gas Guard 6-6
Operation of CO_2 or N_2 Gas Guard 6-6
Humidity Readout (190643) 6-7
Cooling Coil 6-8
Installing Cooling Coil Incubator 6-10

Section 7 **Specifications 7-1**

Section 8 **Spare Parts 8-1**
All Models 8-1
Spare Parts - 115V 8-2
Spare Parts - 230V 8-2
Spare Parts - IR or O_2 8-3
Spare Parts - Gas Guard 8-3
Spare Parts - Humidity Readout 8-3
Field Installation Kits for qualified service personnel 8-3
Spare Parts - Data Output Options 8-3
Exploded Parts Drawings 8-4

Section 9 **Electrical Schematics 9-1**

Section 10 **Warranty Information 10-1**

Section 11 **Interior Door Connector 11-1**

Section 1 Installation and Start-Up

Component Name and Description

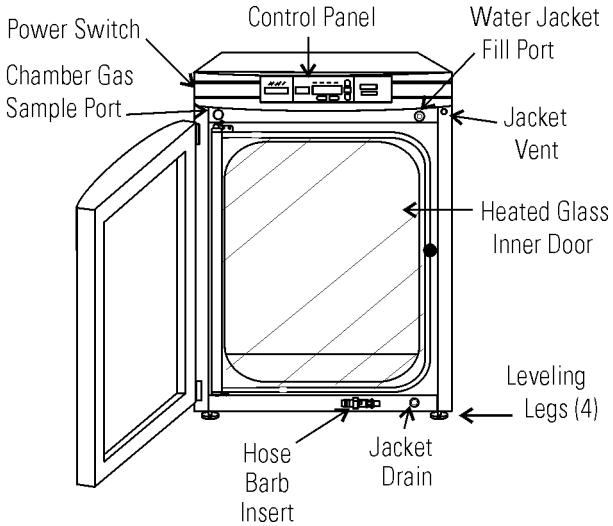

Figure 1-1. Water Jacket Incubator

- Outer Door - Reversible to opposite swing (Section 5).
- Heated Inner Door - Keeps chamber interior dry. Reversible to opposite swing (Section 5).
- Chamber Gas Sample Port - Used for sampling chamber CO_2 and optional O_2 content for calibration (Section 2).
- Main Power Switch
- Control Panel - Keypad, Displays and Indicators (Figure 1-2).
- Fill Port - Used for filling the water jacket.
- Water Jacket Vent - Allows air to escape from the water jacket during filling and normal expansion and contraction when the incubator heats or cools.
- Leveling Legs - Used to level the unit.
- Water Jacket Drain – Use hose barb insert included.

Note The incubators are stackable. Instructions follow in this section. ▲

Control Panel Keys, Displays & Indicators

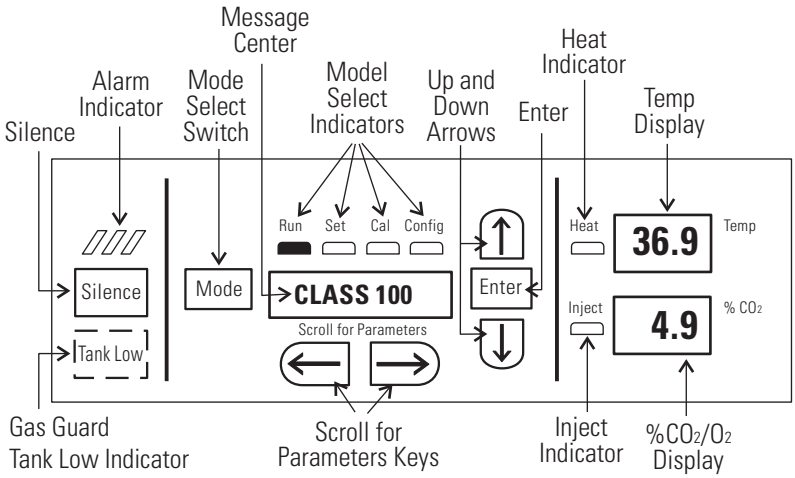

Figure 1-2. Control Panel

- Alarm Indicator - Pulses on/off during an alarm condition in the cabinet.
- Silence - Silences the audible alarm.
- Tank Low Indicator - Used with Gas Guard, lights when gas tank is low, if applicable.
- Mode Select Switch - Used to select Run, Setpoints, Calibration and System Configuration Modes.
- Message Center - Displays system status.
- Mode Select Indicators - Run, Set, Cal and Config Menus
- Up and Down Arrows - Increases or decreases number parameter values, toggles choice parameter values.
- Enter - Accepts changes to calibration settings
- Heat Indicator - Lights when power is applied to heaters.
- Temp Display - Can be programmed to display temperature continuously, RH continuously (with RH option) or toggle between temperature and humidity (with RH option). See Configuration Section.
- Scroll for Parameters Keys - Scrolls through parameters of selected mode.
- Inject Indicator - Lights when gas is injected into the chamber. If the %CO2/O2 display is continuously displaying CO_2, the light indicates CO_2 injection only. If the %CO2/O2 display is continuously displaying O_2, the light indicates N_2 injection. If the %CO2/O2 is toggling, either a CO_2 or N_2 injection causes the indicator to light.
- %CO2/O2 Display - Can be programmed to display CO_2 continuously or O_2 continuously (on units equipped with O_2), or toggle between CO_2 and O_2 (on units equipped with O_2). See Configuration Section.

Control Panel Operation

The Model 3100 Series water jacket incubator has four basic modes, which allow incubator setup. The modes are as follows: Run, Setpoints, Calibration and System Configuration.

- Run is the default mode that the incubator will normally be in during operation.
- Set is used to enter system setpoints for incubator operation.
- Cal is used to calibrate various system parameters to the customer's satisfaction.
- Config is the system configuration mode that allows for custom setup of various options.

Scroll for Parameters Arrow Keys: Steps the operator through the parameters of SET, CAL and CONFIG Modes. The right arrow goes to the next parameter, the left arrow returns to the previous parameter.

Up Arrow: Increases or toggles the parameter value that has been selected in the SET, CAL and CONFIG Modes.

Enter: Must press Enter key to save to memory all changed values.

Down Arrow: Decreases or toggles the parameter values that have been selected in the SET, CAL and CONFIG Modes.

Silence Key: Press to silence the audible alarm. See Section 4 for alarm ringback times.

Message Center: Displays the system status (Mode) at all times. Displays CLASS 100 or SYSTEM OK during normal operation, or alarm messages if the system detects an alarm condition. See Section 4, Alarms. The display message CLASS 100 is a timing mechanism indicating that, under normal operating conditions with the HEPA filter installed, the air inside the chamber meets the Class 100 air cleanliness standard for particulates of 0.5 micron size or larger per cubic foot of air.

Upper and Lower Displays: These 7-segment displays vary depending upon the options present and the configuration chosen. The upper display can display temp or RH, or toggle between them. The bottom display can display CO_2 or O_2, or toggle between them. See Section 3, Configuration.

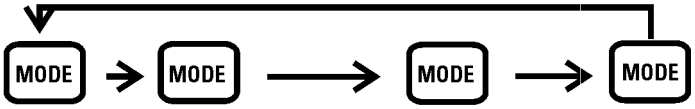

RUN	SETPOINT	CALIBRATION	CONFIGURATION
Default Mode	**Temperature**	**Temp Offset**	**Audible**
	Overtemp	**CO2 Cal**	**New HEPA timer**
	CO2	**IR CO2 Span**	**Replace HEPA reminder**
	O2	*O2 Cal at 20.7%*	**Access Code**
		O2 Offset	**Temp Lo Alarm**
		RH Offset	**Temp Hi Alarm**
			Temp Relay
			CO2 Lo Alarm
			CO2 Hi Alarm
			CO2 Relay
			T/C CO2 Z #
			T/C CO2 S #
			RH Lo Alarm
			RH Relay
			O2 Lo Alarm
			O2 Hi Alarm
			O2 Relay
			Display 1 Setup
			Display 2 Setup
			Gas Guard Setup
			RS485 Address

Base Unit Displays
Option Displays

Installing the Unit

1. Locate the unit on a firm, level surface capable of supporting the unit's operational weight of 365 lbs. (166 kg) plus the estimated total sample and user equipment weight. The overall space should be well ventilated and large enough that the concentration of carbon dioxide (CO2) and/or nitrogen (N2) gases cannot accumulate, thus displacing the oxygen (O2) to dangerous levels in the room. Read Connecting CO2 or N2 (O2 System) Gas Supply below carefully.

Note If two incubators are to be stacked, then the surface must be capable of twice the weight estimated above. ▲

2. Locate the incubator away from exterior doors and windows as changes in outdoor temperatures and contact with direct sunlight can affect the anti-condensation functions of the unit.

3. Position the door opening away from forced air heating and cooling ducts as these can carry dust, dirt, and other contaminants into the incubator chamber, as well as negatively affect the door opening recovery time.

Installing the Unit (continued)

4. Maintain a minimum six inch clearance behind the unit for electrical and gas hook-up. In addition, a minimum three inch ventilation clearance is needed on each side.

5. It is recommended that the unit be placed on a manufacturer approved stand or roller base, not directly on the floor, as the air movement created each time the door is opened will pull dust, dirt, and other contaminants into the incubator chamber.

Warning This incubator weighs 265 lbs (120 kg) before filling the water jacket. If the unit has been in service, disconnect the power cord from both the unit and the power source, turn off all gas regulators, and disconnect all tubing and any other connections from the rear of the electronics drawer before completely draining the water jacket. Do not lift the incubator by the outer door as this could damage the hinges and/or the outer door may come loose. Note that the outer door can be removed to reduce weight and make it easier to lift the unit by its corners. Have sufficient personnel available to lift the unit into place using proper lifting techniques according to local EHS policies. Lift from both sides of the unit (left and right, not front and back) holding it from the bottom. Do not push or pull the incubator along the floor as this could damage the leveling feet. ▲

Stacking the Incubators

Note Stacking brackets (shown at right) and mounting hardware are included with each unit. ▲

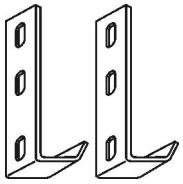

Figure 1-3. Stacking brackets

1. Designate one incubator to be the top unit and the other as the bottom unit. Remove the base cover plate from the top unit using the finger holes in the base or using a slotted screwdriver (Figure 1-4).

2. Note the two slots in the base of the incubator which accommodate the stacking bolts. Refer to Figure 1-5.

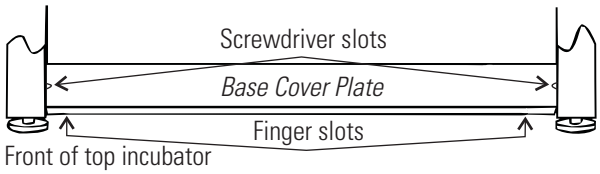

Figure 1-4. Remove Base Cover Plate

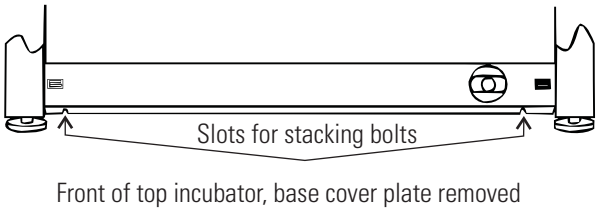

Figure 1-5. Stacking Bolt Slots

Stacking the Incubators (continued)

3. Remove the two plastic plugs from the bolt holes in the exterior top of the bottom unit. Install the ½" long 5/16-18 stacking bolts and washers (Figure 1-6) into the bolt holes - do not tighten the bolts at this time.

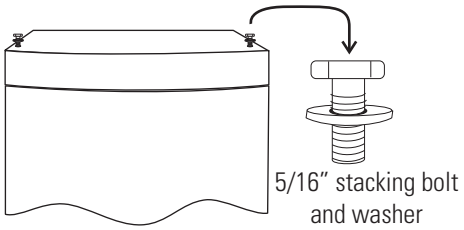

Figure 1-6. Bolt Holes

4. Unscrew to remove the leveling feet from the top unit. Lift it onto the bottom unit, off-setting the base of the top unit approximately 2-3 inches behind the stacking bolts and washers.

5. Align the sides of the top unit and bottom unit. Slide the top unit forward until the slots in the base of the top unit align with the 5/16"-18 stacking bolts in the exterior top of the bottom unit (Figure 1-7).

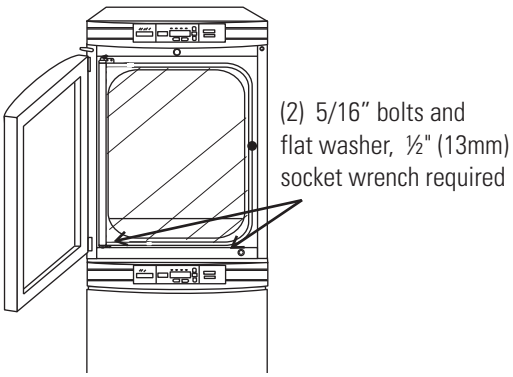

Figure 1-7. Align Slots and Bolts

6. Remove and retain the two screws from the back of the control panel on the bottom unit as identified in Figure 1-8.

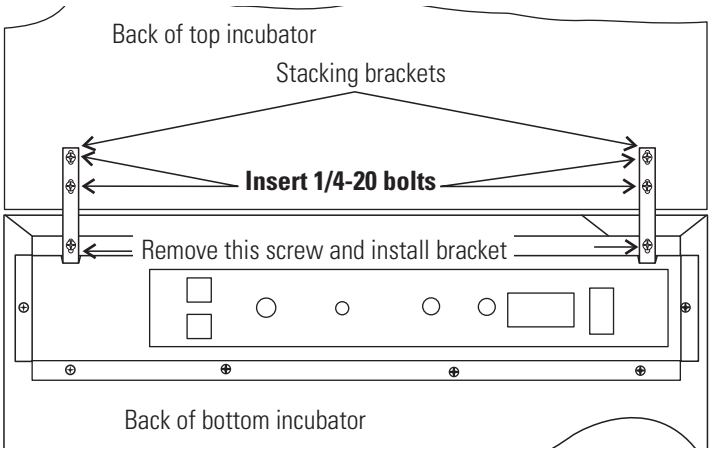

Figure 1-8. Two Screws From Control Panel Back

7. Secure the stacking brackets to the back of the bottom unit, using the retained screws (Figure 1-8). Be sure to align the brackets with the mounting holes on the back of the upper incubator. Secure the brackets to the upper unit with the ¼-20 bolts provided in the stacking kit. A 7/16" wrench or socket is required for the bolts.

Stacking the Incubators (continued)

8. From the unit front, secure the base of the top unit to the exterior top of the bottom unit by tightening the 5/16-18 stacking bolts using a ½" (13 mm) wrench or suitable tool. Refer to Figure 1-7.
9. Replace the base cover on the top unit.

Preliminary Cleaning

1. Remove the protective plastic coating on the shelf supports, duct sheets, and air duct, if present.

Caution Before using any cleaning or decontamination method except those recommended by the manufacturer, users should check with the manufacturer that the proposed method will not damage the equipment. ▲

2. Using a suitable laboratory disinfectant, such as quaternary ammonium, thoroughly clean all interior surfaces to remove any residues which may remain from production of the incubator. Refer to Section 5.

Installing Access Port Filter

Locate the opening in the top left corner of the interior chamber. Remove the tape from the opening on the outside of the unit. Locate the stopper with filter in the hardware bag. Install in the opening inside the chamber (Figure 1-9).

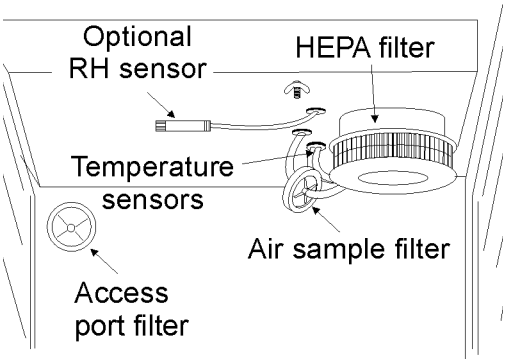

Figure 1-9. Filter and Sensor Locations

Installing Air Sample Filter

1. Remove the filter from the shipping bag.
2. Separate one section of the tubing from the filter. Install this section to the fitting on the blower plate.
3. After installing the top duct, connect the filter assembly to the tubing coming through the top duct.
4. Insert the free end of the air sample filter tubing into the larger hole in the back of the blower scroll. See Figure 1-9 for completed configuration.

Installing HEPA Filter

Note There are standard and Volatile Organic Chemical (VOC) HEPA filters available. Be certain to install the correct filter for the given application. See Section 8.▲

Caution Handle the HEPA filter very carefully as the filter media can be easily damaged. Do not touch the filter media during installation. ▲

1. Remove the filter from the shipping box.
2. Remove the plastic coating from the filter and inspect the filter for any visible signs of damage.
3. Install the filter as shown in Figure 1-9.
4. The default HEPA filter replacement reminder was set at the factory for 6 months. See Section 3 to change the timer value.

Caution To avoid damage to the incubator, do not operate the unit without the HEPA filter in place. If higher RH is needed and CLASS 100 air quality conditions are not required, use the restrictor plate instead of the HEPA filter in order to maintain proper air flow. ▲

Installing Shelves

1. Install the side ducts with the tabs facing into the center of the chamber with their slots up. There are no right side or left side ducts, simply rotate one of them to fit the opposite side. Tilt the side ducts as they are placed in the chamber so the tops fit into the top air duct, then guide them into the vertical position. Figure 1-10 shows the duct as it would be oriented for the right side of the chamber.
2. Referring to Figure 1-10, note that there is no difference between left and right side shelf channels.

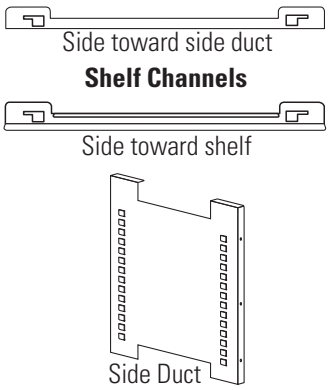

Figure 1-10. Shelf Channels and Side Duct

Installing Shelves (continued)

3. Install the shelf channels by placing the channel's rear slot over the appropriate rear tab on the side duct. Pull the shelf channel forward and engage the channel's front slot into the side duct's appropriate forward tab. Refer to Figure 1-11.

4. Figure 1-12 shows one of the channels installed on the right side duct. Note that if a shelf is installed in any of the bottom 3 rows of side duct tabs that it will need to be removed to take out the humidity pan to clean and add water.

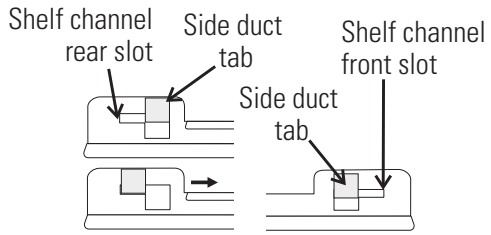

Figure 1-11. Slot and Tab

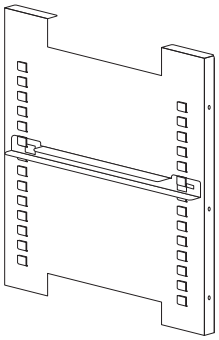

Figure 1-12. Channel Installed

5. The shelf can be installed with the sides up forming a tray that can be easily removed with all of its samples, or with the sides down allowing the samples to be carefully slid off individually. The shelf can be partially pulled out to access samples not in the front, but be careful to not pull the shelf out too far as there are no stops to prevent the shelf from falling out.

Leveling the Unit

Check the unit for being level by placing a bubble-style level on one of the shelves. Turn hex nut on leveler counterclockwise to lengthen the leg, or clockwise to shorten it. Level the unit front-to-back and left-to-right.

Connecting Unit to Electrical Power

For electrical specifications, see the serial tag on the side of the unit, Section 7 Specifications, or refer to the electrical schematics in Section 9 of this manual.

Warning Connect the incubator to a grounded dedicated circuit only. The power cord connector is the mains disconnect device for the incubator. Position the unit to allow unobstructed access to the power cord so that it can be easily disconnected in case of an emergency. ▲

Plug the provided power cord into the power inlet connector (Figure 1-13) and into the grounded dedicated circuit.

Filling Water Jacket

Caution For stacked incubators, completely fill the bottom unit before filling the top unit in order to maintain the lowest possible center of gravity. ▲

Turn the power switch On. ADD WATER will appear in the message center. Press the Silence key to silence the alarm for 15 minutes. If the water jacket is empty, yet the message center does not display ADD WATER, then the liquid level switch could be faulty. Call Technical Services.

Remove the fill port plug and set aside.

For ease of connecting/disconnecting, use the silicone tubing provided to connect directly to the fill port. See Figure 1-1 and this detail. Do not install vinyl tubing directly onto the fill port as it may be difficult to remove. A 3/8" to 3/8" hose connector has been provided to attach lengths of vinyl tubing to the silicone fill port tubing to reach the water source, or simply attach the included funnel to manually fill using small containers.

Caution Chlorine is detrimental to stainless steel. Using chlorinated tap water or additives that contain chlorine will void water jacket warranty! ▲

For optimum incubator operation, the recommended water type is sterile distilled Type 2 water with a pH between 7 and 9, and a resistivity between 50 kΩ - 1 MΩ-cm (conductivity of 1-20 µS/cm). Reverse osmosis (RO), deionized (DI), and ultrapure Type 1 water can corrode stainless steel, copper, glass and other incubator components over time because high purity water with low ionic content and high resistivity will actively pull ions from these materials. If sterile distilled Type 2 water is not readily available, then these other water types could be used by adding the necessary amount of a sterile solution of weak sodium bicarbonate to raise the pH between 7 and 9 and lower the resistivity between 50 kΩ - 1 MΩ-cm (conductivity of 1-20 µS/cm).

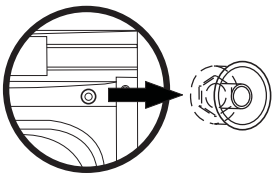

Detail 1

Caution Do not block the water jacket vent! ▲

Carefully fill the jacket with water. Do not overfill the jacket as the excess water will pour out through the water jacket vent (see Figure 1-1).

When the jacket is full, the audible alarm will sound a continuous tone for 10 seconds and the alarm condition will be cleared. Refer to Section 4, Table of Alarms.

Note Model 3100 Series incubators are shipped from the factory with a rust inhibitor added to 0.2 gallons (0.8 liters) of water in the jacket. The rust inhibitor must be replenished every 2 years. See Section 5 to drain water from the jacket and add the correct proportion of rust inhibitor mixture back into the jacket. ▲

Filling Water Jacket (continued)

Disconnect the silicone tubing from the fill port, and replace the fill port plug removed above.

Warning Once the jacket is full, be certain to clean up any water that may have dripped down the side of the unit or spilled onto the floor during this process to prevent a possible slip hazard. ▲

Filling Humidity Pan

Caution Use of chlorinated water, or decontamination products containing chlorine, will deteriorate the stainless steel and cause rust, voiding the warranty. ▲

Fill the humidity pan to within 1/2 inch of the top with 0.8 gallons (3 liters) of water, as described in Filling Water Jacket. If the water cannot be sterilized, a 2% solution of quaternary ammonium can be used as a disinfectant additive to control bacteria and other organic contaminants, if desired. Place the pan directly in the center of the incubator floor to ensure optimum humidity and temperature response.

For applications requiring higher humidity conditions, the pan should be placed against the left side wall of the incubator. The ductwork has been designed for this purpose. This will also accelerate humidity recovery after door openings. Even higher humidity conditions can be achieved by removing the humidity pan altogether and adding water directly to the bottom of the incubator chamber, being careful to not fill it any higher than the bottom edge of the silicone door gasket. Also the chamber gas sample port (Figure 1-1) may be capped to assist in achieving greater RH. In some ambients, this may cause condensation to form in the chamber.

Warning Wipe up any excessive condensation to prevent it from dripping onto the floor creating a possible slip hazard. For stacked incubators, this may also include the drip channel (just behind the face of the control panel drawer) on the bottom unit used to direct water away from the electronics drawer. ▲

Warning When the humidity pan is in place, be certain to clean up any water that may have spilled in the unit or onto the floor during this process, to prevent a possible slip hazard. For stacked incubators, this may also include the drip channel (just behind the face of the control panel drawer) on the bottom unit, used to direct water away from the electronics drawer. ▲

Caution Check the level and change the water frequently to avoid contamination. Do not allow the water level to fluctuate significantly. “Dry-outs” will have an adverse effect on the humidity level as well as CO_2 calibration. ▲

Connecting CO_2 or N2 (O_2 System) Gas Supply

Warning High concentrations of CO_2 gas can cause asphyxiation! Refer to local EHS policies regarding employee exposure to CO_2. Carbon dioxide monitors are recommended for confined areas where concentrations of carbon dioxide gas can accumulate. ▲

Warning High concentrations of N_2 gas can cause aphyxiation! N_2 and CO_2 can displace oxygen levels in a confined atmosphere. Refer to local EHS policies regarding employee exposure to N_2. Oxygen monitors are recommended for confined areas where concentrations of N_2 or CO_2 may displace oxygen. ▲

Note For customer convenience, 12 feet of 1/4” ID vinyl tubing with two 3/8” hose clamps are included in the shipping materials for connecting the unit to the gas supply. ▲

The incubator has 1/4” barbed fittings on the back of the cabinet to connect the gas supply. Refer to Figure 1-13. The fitting is labeled CO2 Inlet #1. The N2 Inlet is also labeled.

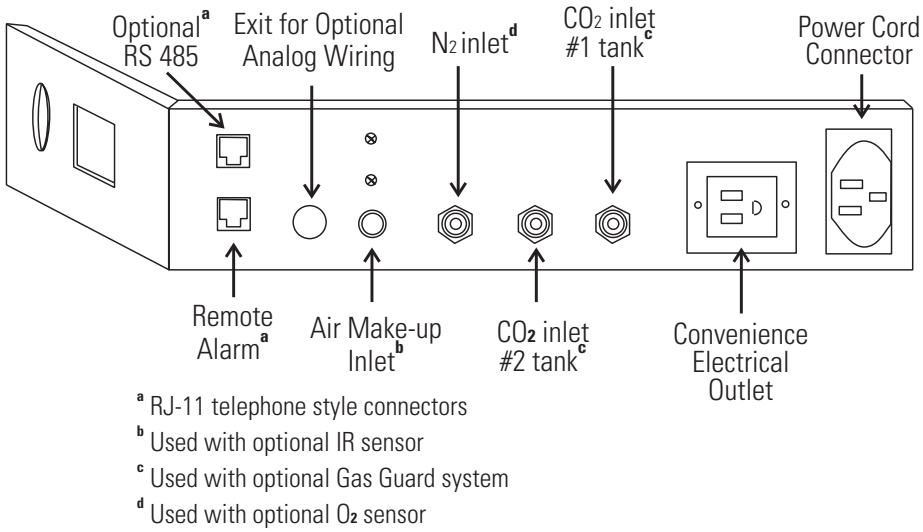

Figure 1-13. Back Panel and All Connections

Install 3/8" hose clamps to secure the 1/4" ID tubing to the barbed fittings on the regulator and the rear of the electronics drawer.

Warning Check for leaks at all connections. ▲

For units having the CO_2 or N_2 Gas Guard option, see Section 6.

Warning This incubator is designed to be operated with CO_2 gas, or N_2 in those units with an O_2 control system. Connecting a flammable or toxic gas can result in a hazardous condition. Gases other than CO_2 or N_2 should not be connected to this equipment. ▲

Connecting CO_2 or N2 (O_2 System) Gas Supply (cont.)

The CO_2 gas supply being connected to the incubator should be industrial grade, 99.5% pure. Do not use CO_2 gas cylinders equipped with siphon tubes. A siphon tube is used to extract liquid CO_2 from the cylinder, which can damage the pressure regulator. Consult with your gas supplier to ensure that the CO_2 cylinder does not contain a siphon tube. The N_2 gas supply being connected to the incubator should be 99.99% pure. Do not use liquid nitrogen.

A two-stage pressure regulator is required to be installed on the outlet valve of the gas cylinder. The high pressure gauge at the tank should have 0-2000 psig range and the low pressure gauge at the incubator inlet should have a 0-30 psig range. Input pressure to the incubator must be maintained at 15 psig (103.4 kPa) maximum for proper performance of the CO_2 or O_2 control system.

If higher purity CO_2 is desired inside the incubator (greater than 99.5% pure), the pressure regulator should be constructed with a stainless steel diaphragm along with specifying the purity of the CO_2 from the gas supplier. Follow the manufacturer's instructions to ensure proper and safe installation of the pressure regulator on the gas cylinder. Gas cylinders should be secured to a wall or other stationary object to prevent tipping. Position the gas cylinders to allow unobstructed access to the pressure regulators so that they can be easily turned off in case of an emergency. Consult your facility safety officer to ensure that the equipment is installed in accordance with the codes and regulations applicable in your area.

Note Stored product should be protected by an activated alarm system capable of initiating a timely response 24 hours/day. These alarms provide interconnect for centralized monitoring. See Factory Installed Options, Section 6 for more information. ▲

Incubator Start-Up

Now that the incubator has been properly installed, connected to power, filled with water, humidity pan filled, and connected to gas supplies, system setpoints can be entered. The following setpoints can be entered in set mode: temperature, over temperature, CO_2 and O_2. To enter Set Mode, press the Mode key until the Set indicator lights. Press the right and/or left arrow keys until the proper parameter appears in the message center. See Chart 1-1 for more detail.

Caution It is the responsibility of the user to validate the proper operation of each incubator in their specific application(s) with respect to unit location, operating environment and settings. ▲

Setting the Operating Temperature

Models 3110/3111 have an operating temperature (setpoint) range of 10 to 55°C, Models 3120/3121 at 10 to 50°C, and Models 3130/3131, 3140/3141 at 10 to 45°C. The incubator can only accurately control temperature as low as +5C above ambient unless it has been installed with the cooling coil option at the factory which allows the incubator to run at lower temperatures. See Cooling Coil, Section 6. The incubator is shipped from the factory with a temperature setpoint of 10°C. At this setting, all heaters and alarms are turned off.

To change the operating temperature setpoint:

1. Press the Mode key until the Set indicator lights.
2. Press the right arrow until TEMP XX.XC is displayed in the message center.
3. Press the up/down arrow until the desired temperature setpoint is displayed.
4. Press Enter to save the setpoint.
5. Press the Mode key until the Run Indicator lights to go to Run mode or right/left to go to next/previous parameter.

Setting the Overtemp Setpoint

Caution In the event that the heaters are locked on as a result of a failure in the main temperature control, the independent overtemp circuit is designed as a safety to protect the incubator only. It is not intended to protect or limit the maximum temperature of the cell cultures or customer's equipment inside the incubator if an overtemp condition occurs. ▲

The incubator is equipped with an independent circuit that monitors the air temperature in the cabinet. Should the main temperature control fail, the overtemp circuit will disconnect power to all heaters when the chamber temperature reaches the Overtemp setpoint. When the chamber temperature falls below the Overtemp setpoint, the overtemp circuit will reconnect power to all heaters. An incubator operating in the overtemp condition will maintain the chamber temperature approximately 1°C around the Overtemp setpoint.

The factory setting for the Overtemp is 40°C. It can be set over a range of temp setpoint +0.5°C to 60°C. If the temperature setpoint is moved above the Overtemp setpoint, the Overtemp will automatically update to 1.0°C+ the temp setpoint. It is recommended that the Overtemp setpoint be 1°C over the temp setpoint.

Setting the Overtemp Setpoint (continued)

To set the Overtemp setpoint:

1. Press the Mode key until the Set indicator lights.
2. Press the right arrow until OTEMP XX.XC is displayed in message center.
3. Press the up/down arrow until the desired Overtemp setpoint is displayed.
4. Press Enter to save the setpoint.
5. Press the Mode key until the Run Indicator lights to go to Run mode or right/left to go to next/previous parameter.

Setting CO_2 Setpoint

All T/C CO_2 cells are precalibrated at the factory at 37°C, high humidity, and 10% CO_2. Therefore, if a temperature setpoint of 37°C has been entered, the humidity pan filled, and the CO_2 control is to run between 0-10% with a T/C CO_2 sensor, the CO_2 setpoint may be entered immediately. Otherwise, it is important to allow the unit 12 hours to stabilize at the temperature setpoint before entering the CO_2 setpoint.

All models of the incubator have a CO_2 setpoint range of 0.0% to 20.0%. The incubator is shipped from the factory with a CO_2 setpoint of 0.0%. At this setting, all CO_2 control and alarms are turned off.

To change the CO_2 setpoint:

1. Press the Mode key until the Set indicator lights.
2. Press the right arrow until CO2 XX.X% is displayed in message center.
3. Press the up/down arrow until the desired CO_2 setpoint is displayed.
4. Press Enter to save the setpoint.
5. Press the Mode key until the Run Indicator lights to go to Run mode or right/left to go to next/previous parameter.

Setting O_2 Setpoint

Models 3130, 3131, 3140, and 3141 of the incubator have a built-in O_2 control system. The O_2 setpoint range is 1.0% to 21.0%. The incubator is shipped from the factory with a O_2 setpoint of 21.0%. At this setting, all O_2 control and alarms are turned off. The gas sample port must be capped when running controlled O_2 levels.

To change the O_2 setpoint:

1. Press the Mode key until the Set indicator lights.
2. Press the right arrow until O2 XX.X% is displayed in the message center.
3. Press the up/down arrow until the desired O_2 setpoint is displayed.
4. Press Enter to save the setpoint.
5. Press the Mode key until the Run Indicator lights to go to Run mode or right/left to go to next/previous parameter.

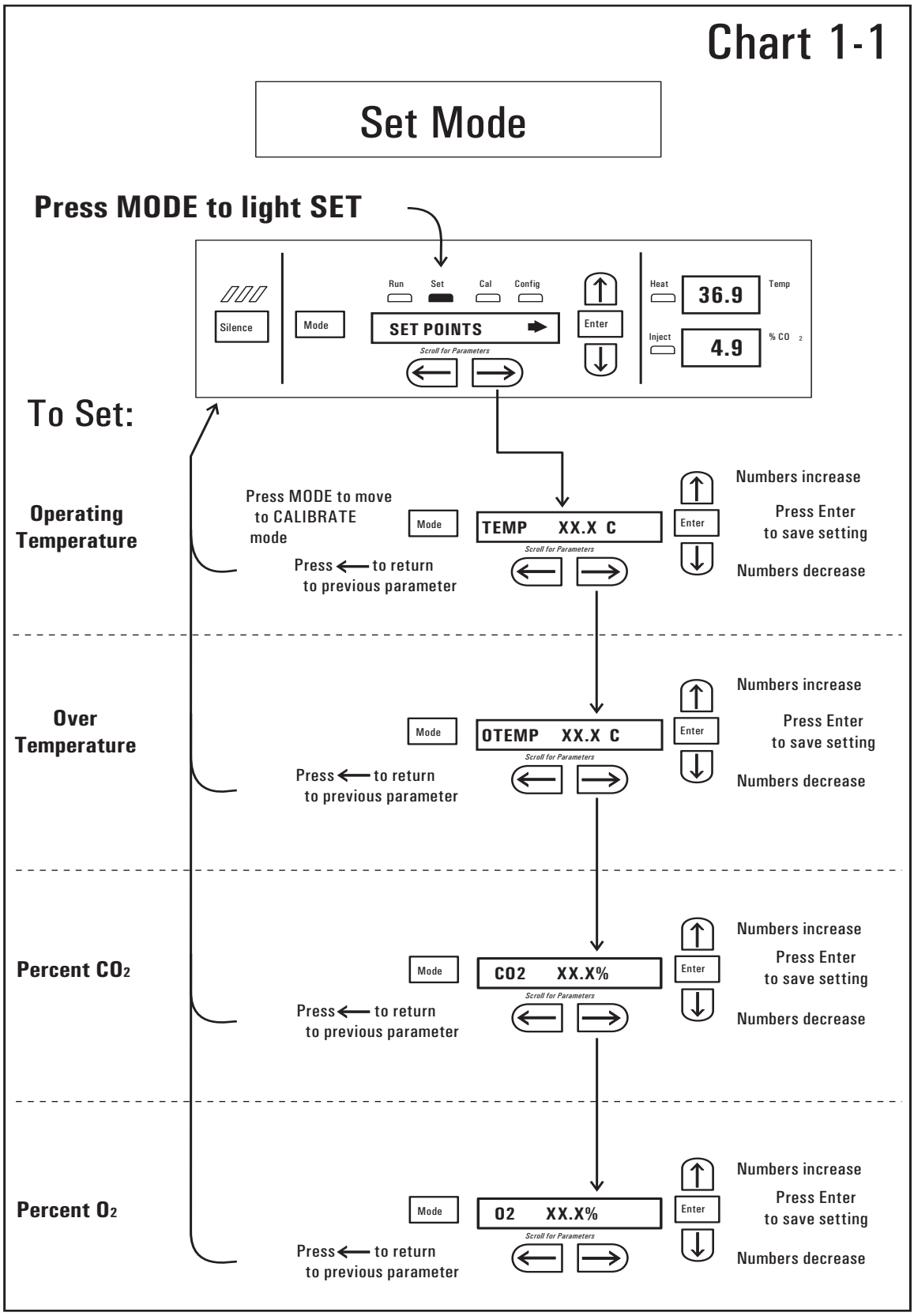
Chart 1-1
Set Mode
Press MODE to light SET
Silence
Mode
Run
Set
Cal
Config
SET POINTS
Scroll for Parameters
Enter
Heat
36.9
Temp
Inject
4.9
% CO 2
To Set:
Operating Temperature
Press MODE to move to CALIBRATE mode
Mode
TEMP XX.X C
Scroll for Parameters
Enter
Numbers increase
Press Enter to save setting
Numbers decrease
Press ← to return to previous parameter
Over Temperature
Mode
OTEMP XX.X C
Scroll for Parameters
Enter
Numbers increase
Press Enter to save setting
Numbers decrease
Press ← to return to previous parameter
Percent CO2
Mode
CO2 XX.X%
Scroll for Parameters
Enter
Numbers increase
Press Enter to save setting
Numbers decrease
Press ← to return to previous parameter
Percent O2
Mode
O2 XX.X%
Scroll for Parameters
Enter
Numbers increase
Press Enter to save setting
Numbers decrease
Press ← to return to previous parameter

Section 2 Calibration

After the unit has stabilized, several different systems can be calibrated. In the Calibration Mode, the air temperature, CO_2 reading, O_2 reading, and RH reading can all be calibrated to reference instruments. To enter Calibration Mode, press the Mode key until the CAL indicator lights. Press the right and/or left arrow until the proper parameter appears in the message center. See Chart 2-1 for more detail.

Calibration frequency is dependent on use, ambient conditions, and accuracy required. Good laboratory practice would require at least an annual calibration check. On new installations, all parameters should be checked after the stabilization period.

Prior to calibration, the user should be aware of the following system functions. While the unit is in Calibration Mode, all system control functions will be stopped so that the unit remains stable. Readout of the system being calibrated will appear as "—-" on the readout displays. If no keys are pressed for approximately five minutes while in Calibration Mode, the system will reset to Run Mode so that control functions can be reactivated.

Caution Before making any calibration or adjustments to the unit, it is imperative that all reference instruments be properly calibrated. It is the responsibility of the user to understand the interactive effects of temperature, CO_2%, O_2% and RH% on each other and the independent reference instruments, especially a Fyrite® sensor. Read and understand all reference instrument operating manuals before use. Double-check all values entered into the incubator for accuracy before completing the calibration and returning the unit to service. ▲

Calibrating the Temperature

Place the calibrated instrument in the center of the chamber. The instrument should be in the airflow, not against the shelf. Before calibration, allow the cabinet temperature to stabilize.

Start-Up - Allow 12 hours for the temperature in the cabinet to stabilize before proceeding.

Operating Unit - Allow at least two hours after the display reaches setpoint for the temperature to stabilize before proceeding.

1. Press the Mode key until the CAL indicator lights.
2. Press the right arrow until TMPCAL XX.XC appears in the message center.
3. Press the up/down arrow to match the display to a calibrated instrument.
4. Press Enter to store the calibration into memory.
5. Press the Mode key to return to Run, or the right/left arrow to go to the next/previous parameter.

Calibrating T/C CO_2 System

Models 3110, 3111, 3130 and 3131 have a thermal conductivity (T/C) CO_2 sensor. Thermal conductivity of the incubator atmosphere is not only effected by the quantity of CO_2 present, but also by the air temperature and the water vapor present in the incubator atmosphere. In monitoring the effects of CO_2, air temperature and absolute humidity must be held constant so any change in thermal conductivity is caused only by a change in CO_2 concentration.

Any changes to the temperature setpoint and/or humidity level control method (humidity pan location, capping ports, HEPA filter type) will necessitate a recalibration of the CO_2 control.

Some T/C CO_2 sensors go through an aging period, especially on new installations. Calibration should be checked on a weekly basis, and adjusted as necessary. When stabilization occurs, checks can become less frequent.

Calibrating T/C CO_2 System (continued)

Start-up - The CO_2 sensor has been calibrated at the factory for 37°C. Allow temperature, humidity, and CO_2 levels in the chamber to stabilize at least 12 hours before checking the CO_2 concentration with an independent instrument.

Presently operating - Make sure the chamber doors are closed. Allow at least 2 hours after the temperature and CO_2 displays reach their setpoints for chamber atmosphere stabilization.

1. Measure the CO_2 concentration in the chamber through the gas sample port with an independent instrument. Take several readings to ensure accuracy.
2. Press the Mode key until the CAL indicator lights.
3. Press the right arrow until CO2CAL XX.X% is displayed in the message center.
4. Press the up/down arrow to change the display to match the independent instrument.
5. Press Enter to store calibration.
6. Press the Mode key to return to Run Mode, or the right or left arrow keys to go to the next/previous parameter.

Calibrating Infra-Red CO_2 System

Models 3120, 3121, 3140 and 3141 have an infra-red CO_2 sensor. Infra-red CO_2 sensors are not affected by chamber atmosphere, temperature or humidity. However, the light detector in the sensor is affected by wide temperature changes. Therefore, changing temperature setpoints could necessitate a recalibration of the IR CO_2 sensor before use. Chamber temperature should be allowed to stabilize before checking CO_2 concentrations with an independent instrument, especially on start-up.

All models equipped with an IR CO_2 sensor have an automatic calibration that occurs every 24 hours, and lasts for 5 to 6 minutes. During automatic calibration, the CO_2 display is blanked out and HEPA filtered room air is pumped through the CO_2 sensor. A new CO_2 calibration value is stored in memory for use as the 0.0% CO_2 reference point. The keypad/ control panel is locked during calibration, with the message center reading CO2 AUTO CAL.

Calibrating Infra-Red CO_2 System (cont.)

Startup- Allow the temperature and the CO_2 of the cabinet to stabilize at least 12 hours before proceeding.

Operating Unit - Allow CO_2 to stabilize at least 2 hours at setpoint before proceeding.

To ensure accurate calibration, the unit will not allow CO_2 to be spanned below 3%. If the cabinet does not contain at least 3% CO_2, increase the setpoint and allow the unit to stabilize before completing this procedure.

1. Measure the CO_2 concentration in the chamber through the gas sample port with an independent instrument. Take several readings to ensure accuracy.
2. Press the Mode key until the CAL indicator lights.
3. Press the right arrow until IR CAL XX.X% appears in the message center.
4. Press the up/down arrow to adjust the display to match the independent instrument reading.
5. Press Enter to store calibration.
6. After Enter is pressed, the unit will go into a calibration cycle that lasts 5 to 6 minutes. Control panel is locked during this calibration cycle.
7. Press the Mode key to return to Run Mode.

Calibrating the O_2 System

Models 3130, 3131, 3140 and 3141 have an O_2 control sensor. The sensor is a fuel cell that puts out a linear millivolt signal based on O_2 content of the chamber. The life expectancy for an O_2 sensor fuel cell is approximately 5 years (specified at an oxygen concentration of 20.7% and ambient temperature of 20°C) even if the unit is not in use. During normal incubator operation, exposure to lower concentrations of oxygen increases the life expectancy, whereas increased ambient temperatures decreases it. The cumulative effects of these conditions over time are unpredictable, but the unit is able to measure the remaining life of the O_2 sensor fuel cell based on its voltage output when the system is calibrated using the 20.7% method and display a sensor fault as required (Section 4); thus, it is important to calibrate the system using this method before each test experiment, or at least every 6 months.

Calibrating the O_2 System (continued)

There are two methods available to calibrate the O_2 system.

- The preferred method calibrates the system to the known ambient O_2 value of 20.7% and checks the life of the sensor. This method should be used whenever a new O_2 sensor fuel cell is installed.
- The second method available allows the system to be calibrated to an independent reference instrument by entering an offset. This method should be used whenever higher accuracy is required as it takes into account the effects of the desired chamber temperature setpoint on the O_2 sensor fuel cell output; however, this method does not measure its remaining life.

O_2 Calibration at 20.7%

1. Press the Mode key until the CAL indicator lights.
2. Press the right arrow until the display reads O2 CAL@20.7%.
3. Press Enter.
4. OPEN DOOR appears on the display. Open the outer and inner doors.
5. The display reads CALIBRATING.
6. When calibration is complete, approximately 2 minutes, an audible tone sounds and the display returns to O2 CAL@20.7%.
7. The O_2 display will change to 20.7.
8. Press the Mode key to return to Run.

A new O_2 span value is stored in memory for use as the 20.7% O2 reference point. The keypad/control panel is "locked-up" during calibration.

O_2 Offset Calibration

Startup - Allow the cabinet to stabilize at least 12 hours before proceeding.

Operating Unit - Allow O_2 to stabilize at least 2 hours at set point before proceeding.

1. Measure the O2 concentration in the chamber through the gas sample port with an independent instrument. Take several readings to ensure accuracy.
2. Press the Mode key until the CAL indicator lights.
3. Press the right arrow until O2 OFFS XX.X% appears in the message center.
4. Press the up/down arrow to adjust display to independent instrument reading.
5. Press Enter to store calibration.
6. Press the Mode key to return to Run Mode.

Calibrating Relative Humidity (RH)

All Model 3100 Series incubators can be equipped with an optional direct readout relative humidity sensor. This is a readout only of the chamber relative humidity. It does not provide any control of the relative humidity in the cabinet.

Place the calibrated instrument in the center of the chamber.
The instrument should be in the airflow, not against the shelf.
Before calibration, allow the cabinet temperature to stabilize.

Startup - Allow 12 hours for the relative humidity and temperature in the chamber to stabilize before proceeding.

Operating Unit - Allow at least 2 hours after temperature display reaches setpoint for relative humidity to stabilize before proceeding.

1. Press the Mode key until the CAL indicator lights.
2. Press the right arrow key until RH CAL XX% appears in message center.
3. Press the up/down arrow to match the display to the independent instrument.
4. Press Enter to store the calibration.
5. Press the Mode key to return to Run Mode.

Calibrating Relative Humidity (RH) cont.

If a reliable RH measuring device is not available, the display may be calibrated to a typical level. This calibration method should be accurate to within 5%.

1. Follow the RH stabilization periods outlined above.
2. With a full humidity pan and stable temperature, the relative humidity in the chamber will be 95%.
3. Using Steps 3-5 of the relative humidity sensor adjustment above, adjust the display to 95%.

Chart 2-1

Calibrate Mode

Press MODE to light CAL:

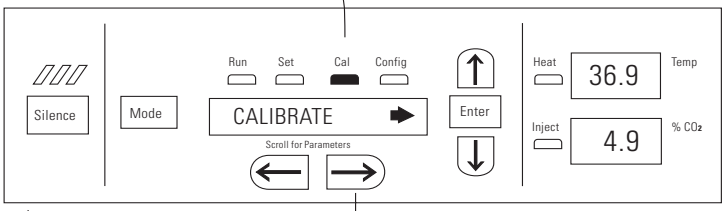

To Calibrate:

Operating Temperature

Press MODE to move to SYS CONFIG mode

Mode — TMPCAL XX.XC — Scroll for Parameters

Press ← to return to previous parameter

Enter — Numbers increase — Press Enter to save the setting — Numbers decrease

Zero CO_2
(when Thermal Conductivity sensor is in use)

Mode — CO2CAL XX.XC — Scroll for Parameters

Press ← to return to previous parameter

Enter — Numbers increase — Press Enter to save the setting — Numbers decrease

Span Co_2
(when IR sensor is in use)

Mode — IR CAL XX.X% — Scroll for Parameters

Press ← to return to previous parameter

Enter — Numbers increase — Press Enter to save the setting — Numbers decrease

Percent O_2 @ 20.7%
(when O_2 option is in use)

Mode — O2 CAL@20.7% — Scroll for Parameters

Press ← to return to previous parameter

Enter — Numbers increase — Press Enter to save the setting — Numbers decrease

Percent O_2
(when O_2 option is in use)

Mode — O2 OFF XX.X% — Scroll for Parameters

Press ← to return to previous parameter

Enter — Numbers increase — Press Enter to save the setting — Numbers decrease

Percent RH
(when RH option is in use)

Mode — RH CAL XX% — Scroll for Parameters

Press ← to return to previous parameter

Enter — Numbers increase — Press Enter to save the setting — Numbers decrease

Section 3 Configuration

There are many features available in Configuration Mode that allow custom setup of the incubator. These features are described below. All features may not be necessary in all applications, but are available if needed. To enter Configuration Mode, press the Mode key until the Config indicator lights. Press the right or left arrow until the appropriate parameter appears in the message center. See Chart 3-1 for more detail.

Turning the Audible Alarm ON/OFF

The audible alarm can be turned on or off. The factory setting is ON.

1. Press the Mode key until the Config indicator lights.
2. Press right arrow until AUDIBLE XXX is displayed in message center.
3. Press the up/down arrow to toggle Audible ON/OFF.
4. Press Enter to save the setting.
5. Press the Mode key to return to Run Mode or right/left to go to next/previous parameter.

New HEPA Filter

When the REPLACE HEPA reminder is displayed and the visual alarm flashes, the specified time has elapsed and the HEPA filter should be replaced. Follow the HEPA Filter Maintenance procedures in Section 5. The factory setting is 182 days (calculated from REPL HEPA XX setting of 6 months).

1. Press the Mode key until the Config indicator lights.
2. Press right arrow until NEW HEPA XXX is displayed in message center.

Note Do not press Enter if only viewing remaining days before specified filter replacement time runs out. ▲

3. Press Enter to restart the timer and clear the REPLACE HEPA alarm. This new number is the remaining days before the specified filter replacement time runs out. For example, if 12 months was chosen in the REPL HEPA XX message screen, the NEW HEPA number would be 365 days.
4. Press the Mode key to return to Run Mode.

Setting the REPLACE HEPA Filter Reminder

A HEPA filter replacement timer can be set for a specific amount of time, from 1 to 12 months of actual unit running time. Time will not accrue when the unit is turned off. When the allotted time has run out, REPLACE HEPA appears in the display and the visual alarm flashes. The factory setting is 6 months.

1. Press the Mode key until the Config indicator lights.
2. Press the right arrow until REPL HEPA XX is displayed.
3. Press the up/down arrow to choose the number of months desired.
4. Press Enter to save the number.
5. Press the Mode key to return to Run Mode or right/left to go to next/previous parameter.

Note After the reminder has been set, check the allotted time remaining by going to Config Mode, then pressing the right arrow until NEW HEPA XXX displays. This number is the remaining days before the specified filter replacement time runs out. For example, if 12 months was chosen in the REPL HEPA XX message screen, the NEW HEPA number would be 365 days. ▲

Setting an Access Code

A three-digit Access Code can be entered to avoid unauthorized personnel from changing the setpoints, calibration, or configuration. A setting of 000 will bypass the access code. The factory setting is 000.

1. Press the Mode key until the Config indicator lights.
2. Press the right arrow until ACC CODE XXX is displayed in the message center.
3. Press the up/down arrow to change the access code.
4. Press Enter to save the access code.
5. Press the Mode key to return to Run Mode or right/left to go to next/previous parameter.

Setting Low Temp Alarm Limit

The low temp alarm limit (tracking alarm) is the deviation from the temperature setpoint, which will cause a low temp alarm. The low temp alarm is variable from 0.5° below setpoint to 5.0° below setpoint. The factory setting is 1.0° below setpoint. A minus sign (-) in the display indicates that the alarm setting is below the setpoint.

1. Press the Mode key until the Config indicator lights.
2. Press the right arrow until TMP LO -X.XC is displayed in the message center.
3. Press the up/down arrow to change the low temp alarm limit.
4. Press Enter to save the low temp alarm limit.
5. Press the Mode key to return to Run mode or right/left to go to next/previous parameter.

Setting High Temp Alarm Limit

The high temp alarm limit (tracking alarm) is the deviation from the temperature setpoint that will cause a high temp alarm. It should be noted that this varies from the Overtemp setpoint, in that the Overtemp setpoint configures an independent system that monitors temperature and shuts down the system heaters if necessary. The high temp alarm limit is simply set to enable an audible and visual alarm that notifies the user of a problem. See Section 1, Setting the Overtemp Setpoint. The high temp alarm is variable from 0.5° above setpoint to 5.0° above setpoint.
The factory setting is 1.0° above setpoint.

1. Press the Mode key until the Config indicator lights.
2. Press the right arrow until TMP HI X.XC is displayed in the message center.
3. Press the up/down arrow to change the high temp alarm limit.
4. Press Enter to save the high temp alarm limit.
5. Press the Mode key to return to Run Mode or right/left to go to next/previous parameter.

Enabling Temp Alarms to Trip Contacts

High and Low temperature alarms can be programmed to trip the remote alarm contacts. A setting of ON will cause this, a setting of OFF will not allow temp alarms to trip the contacts. The factory setting is ON.

1. Press the Mode key until the Config indicator lights.
2. Press the right arrow until TEMP RLY XXX is displayed in the message center.
3. Press the up/down arrow to toggle the setting ON/OFF.
4. Press Enter to save the setting.
5. Press the Mode key to return to Run Mode or right/left to go to next/previous parameter.

Setting Low CO_2 Alarm Limit

The low CO_2 alarm limit (tracking alarm) is the deviation from the CO_2 setpoint that will cause a low CO_2 alarm. The setpoint is variable from 0.5% CO_2 below setpoint to 5.0% CO_2 below setpoint. The factory setting is 1.0% CO_2 below setpoint. A minus (-) in the display indicates that the alarm setting is below the setpoint.

1. Press the Mode Key until the Config indicator lights.
2. Press the right arrow until CO2 LO -X.X% is displayed in the message center.
3. Press the up/down arrow to change the low CO_2 alarm limit.
4. Press Enter to save the low CO_2 alarm limit.
5. Press the Mode key to return to Run Mode or right/left to go to next/previous parameter.

Setting High CO_2 Alarm Limit

The high CO_2 alarm limit (tracking alarm) is the deviation from the CO_2 setpoint that will cause a high CO_2 alarm. The setpoint is variable from 0.5% CO_2 above setpoint to 5.0% CO_2 above setpoint. The factory setting is 1.0% CO_2 above setpoint.

Setting High CO_2 Alarm Limit (cont.)

1. Press the Mode key until the Config indicator lights.
2. Press the right arrow until CO2 HI X.X% is displayed in the message center.
3. Press the up/down arrow to change the high CO_2 alarm limit.
4. Press Enter to save the high CO_2 alarm limit.
5. Press the Mode key to return to Run Mode or right/left to go to next/previous parameter.

Enabling CO_2 Alarms to Trip Contacts

High and Low CO_2 alarms can be programmed to trip the remote alarm contacts. A setting of ON will cause this; a setting of OFF will not allow CO_2 alarms to trip the contacts. The factory setting is ON.

1. Press the Mode key until the Config indicator lights.
2. Press the right arrow until CO2 RLY XXX is displayed in the message center.
3. Press the up/down arrow to toggle the setting ON/OFF.
4. Press Enter to save the setting.
5. Press the Mode key to return to Run Mode or right/left to go to next/previous parameter.

Setting Zero #, Span # for T/C CO_2 Sensors

If a new T/C CO_2 sensor is being installed, the two numbers on the factory installed sticker on the T/C cell must be entered to calibrate the CO_2 in the unit.

Note For the technician's convenience, a second label containing the two numbers is supplied with the new T/C cell and should be applied to cover the original label, inside the electronics drawer. ▲

Setting Zero #, Span # for T/C Sensors (cont.)

1. Press the Mode key until the Config indicator lights.
2. Press the right arrow until T/C ZR# XXXX is displayed in the message center.
3. Press the up/down arrow to change the zero number to match the sticker.

Note The '-' symbol denotes the 'minus sign' which is displayed as required by scrolling the zero number through 0. ▲

4. Press Enter to save the setting.
5. Press the right arrow until T/C SP# XXXX is displayed in the message center.
6. Press the up/down arrow to change the span number to match the sticker.

Note The '-' symbol denotes the 'minus sign' which is displayed as required by scrolling the zero number through 0. ▲

7. Press Enter to save the setting.

Note Pressing Enter will erase any CO2CAL offset value previously entered into the Calibration menu. ▲

8. Press the Mode key to return to Run Mode or right/left to go to next/previous parameter.

Setting a Low RH Alarm Limit

On units that have the RH option installed, a low RH alarm limit may be entered. The low RH alarm limit is the %RH in the cabinet that will cause a low RH alarm. The setpoint is variable from setpoint 0 to 90 %RH. The factory setting is 0% RH, which disables the alarm.

1. Press the Mode key until the Config indicator lights.
2. Press the right arrow until RH LO XX% is displayed in the message center.
3. Press the up/down arrow to change the RH low alarm limit.
4. Press Enter to save the RH low alarm limit.
5. Press the Mode key to return to Run Mode or right/left to go to next/previous parameter.

Enabling RH Alarms to Trip Contacts

The low RH alarm can be programmed to trip the remote alarm contacts. A setting of ON will cause this, a setting of OFF will not allow the RH alarm to trip the contacts. The factory setting is ON.

1. Press the Mode key until the Config indicator lights.
2. Press the right arrow until RH RLY XXX is displayed in the message center.
3. Press the up/down arrow to toggle the setting ON/OFF.
4. Press Enter to save the setting.
5. Press the Mode key to return to Run Mode or right/left to go to next/previous parameter.

Setting a Low O_2 Alarm Limit

On models with a O_2 control system, O_2 alarms may be configured. The low O_2 alarm limit (tracking alarm) is the deviation from the O_2 setpoint that will cause a low O_2 alarm. The setpoint is variable from 0.5% O_2 below setpoint to 5.0% O_2 below setpoint. The factory setting is 1.0% O_2 below setpoint. A minus (-) in the display indicates that the alarm setting is below setpoint.

1. Press the Mode key until the Config indicator lights.
2. Press right arrow until O2 LO -X.X% is displayed in message center.
3. Press the up/down arrow to change the low O_2 alarm limit.
4. Press Enter to save the low O_2 alarm limit.
5. Press the Mode key to return to Run Mode or right/left to go to next/previous parameter.

Setting a High O_2 Alarm Limit

On models with a O_2 control system, O_2 alarms may be configured. The high O_2 alarm limit (tracking alarm) is the deviation from O_2 setpoint that causes a high O_2 alarm. The setpoint is variable from 0.5% O_2 above setpoint to 5.0% O_2 above setpoint. The factory setting is 1.0% O_2 above setpoint.

1. Press the Mode key until the Config indicator lights.
2. Press right arrow until O2 HI X.X% is displayed in message center.
3. Press the up/down arrow to change the high O_2 alarm limit.
4. Press Enter to save the high O_2 alarm limit.
5. Press the Mode key to return to Run Mode or right/left to go to next/previous parameter.

Enabling O_2 Alarms to Trip Contacts

High and Low O2 alarms can be programmed to trip the remote alarm contacts. A setting of ON will cause this, a setting of OFF will not allow the O2 alarms to trip the contacts. The factory setting is ON.

1. Press the Mode key until the Config indicator lights.
2. Press right arrow until O2 RLY XXX is displayed in message center.
3. Press the up/down arrow to toggle the setting ON/OFF.
4. Press Enter to save the setting.
5. Press the Mode key to return to Run mode or right/left to go to next/previous parameter.

Enabling Temp/RH to be Displayed

On units that are equipped with the RH option, the upper seven-segment display on the control panel can be configured to display Temp continuously, RH continuously, or toggle between Temp and RH. If the units does not have RH, the upper display will always display temperature. If temperature is set to ON and the RH is set OFF, temperature will be displayed continuously. If temperature is set to OFF and RH is set to ON, RH will be displayed continuously. If both are turned ON, the display will toggle between the two. The factory setting will default to toggle mode if the RH option is present.

1. Press the Mode key until the Config indicator lights.
2. Press the right arrow until DISP TMP XXX or DISP RH XXX is displayed in the message center.
3. Press the up/down arrow to toggle the setting ON/OFF.
4. Press Enter to save the setting.
5. Press the Mode key to return to Run mode or right/left to go to next/previous parameter.

Enabling CO_2/O_2 to be Displayed

On models that are equipped with the O_2 system, the lower seven-segment display on the control panel can be configured to display CO_2 continuously, O_2 continuously, or toggle between CO_2 and O_2. If the units does not have O_2, the lower display will always display CO_2. If CO_2 is set to ON and the O2 is set OFF, CO_2 will be displayed continuously. If CO_2 is set to OFF and O_2 is set to ON, O_2 will be displayed continuously. If both are turned ON, the display will toggle between the two. The factory setting will default to toggle mode if the O_2 system is present.

1. Press the Mode key until the Config indicator lights.
2. Press the right arrow until DISP CO2 XXX or DISP O2 XXX is displayed in the message center.
3. Press the up/down arrow to toggle the setting ON/OFF.
4. Press Enter to save the setpoint.
5. Press the Mode key to return to Run mode or right/left to go to next/previous parameter.

Selecting a Primary Tank (Gas Guard)

On units equipped with the Gas Guard option, a primary tank can be selected. The primary tank can be either Tank 1 or Tank 2. Factory setting is Tank 1.

1. Press the Mode key until the Config indicator lights.
2. Press right arrow until TANK SEL X is displayed in the message center.
3. Press the up/down arrow to toggle the setting between 1 and 2.
4. Press Enter to save the setting.
5. Press the Mode key to return to Run mode or right/left to go to next/previous parameter.

Disabling the Gas Guard System

On units equipped with the Gas Guard option, the Gas Guard system may be turned ON, or OFF if it is not in use. The factory setting is ON.

1. Press the Mode key until the Config indicator lights.
2. Press right arrow until GAS GRD XX is displayed in message center.
3. Press the up/down arrow to toggle the setting ON/OFF.
4. Press Enter to save the setting.
5. Press the Mode key to return to Run mode or right/left to go to next/previous parameter.

Setting a RS485 Address (1535 Only)

On units with the RS485 option, direct communication with Model 1535 alarm system can be established. Each piece of equipment connected to the 1535 must have a unique address. An address of 0-24 can be entered for the incubator. A setting of 0 is a non-communication address that the 1535 ignores. Factory setting for the RS485 address is 0.

1. Press the Mode key until the Config indicator lights.
2. Press right arrow until 485 ADDR XX is displayed in message center.
3. Press the up/down arrow to change the RS485 address.
4. Press Enter to save the RS485 address.
5. Press the Mode key to return to Run mode or right/left to go to next/previous parameter.

Chart 3-1

Configure Mode

Press MODE to light CONFIG

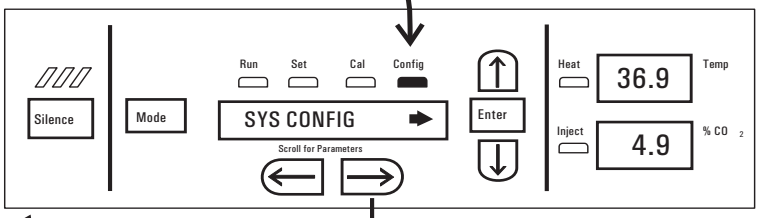

To Configure:

Audible ON/OFF

Press MODE to return to RUN mode

Mode — AUDIBLE XXX — Enter

Scroll for Parameters

Press ← to return to previous parameter

Turn ON audible alarm

Press Enter to save the setting

Turn OFF audible alarm

NEW HEPA Filter

Mode — NEW HEPA XXX — Enter

Scroll for Parameters

Press ← to return to previous parameter

Press Enter to save the setting

REPLACE HEPA Timer

Mode — REPL HEPA XX — Enter

Scroll for Parameters

Press ← to return to previous parameter

Numbers increase

Press Enter to save the setting

Numbers decrease

Access Code

Mode — ACC CODE XXX — Enter

Scroll for Parameters

Press ← to return to previous parameter

Numbers increase

Press Enter to save the setting

Numbers decrease

Low Temp Alarm Limit

Mode — TMP LO XX.XC — Enter

Scroll for Parameters

Press ← to return to previous parameter

Numbers increase

Press Enter to save the setting

Numbers decrease

High Temp Alarm Limit

Mode — TMP HI XX.XC — Enter

Scroll for Parameters

Press ← to return to previous parameter

Numbers increase

Press Enter to save the setting

Numbers decrease

continue on next page

Configure Mode, Chart 3-1, Page 2 of 4

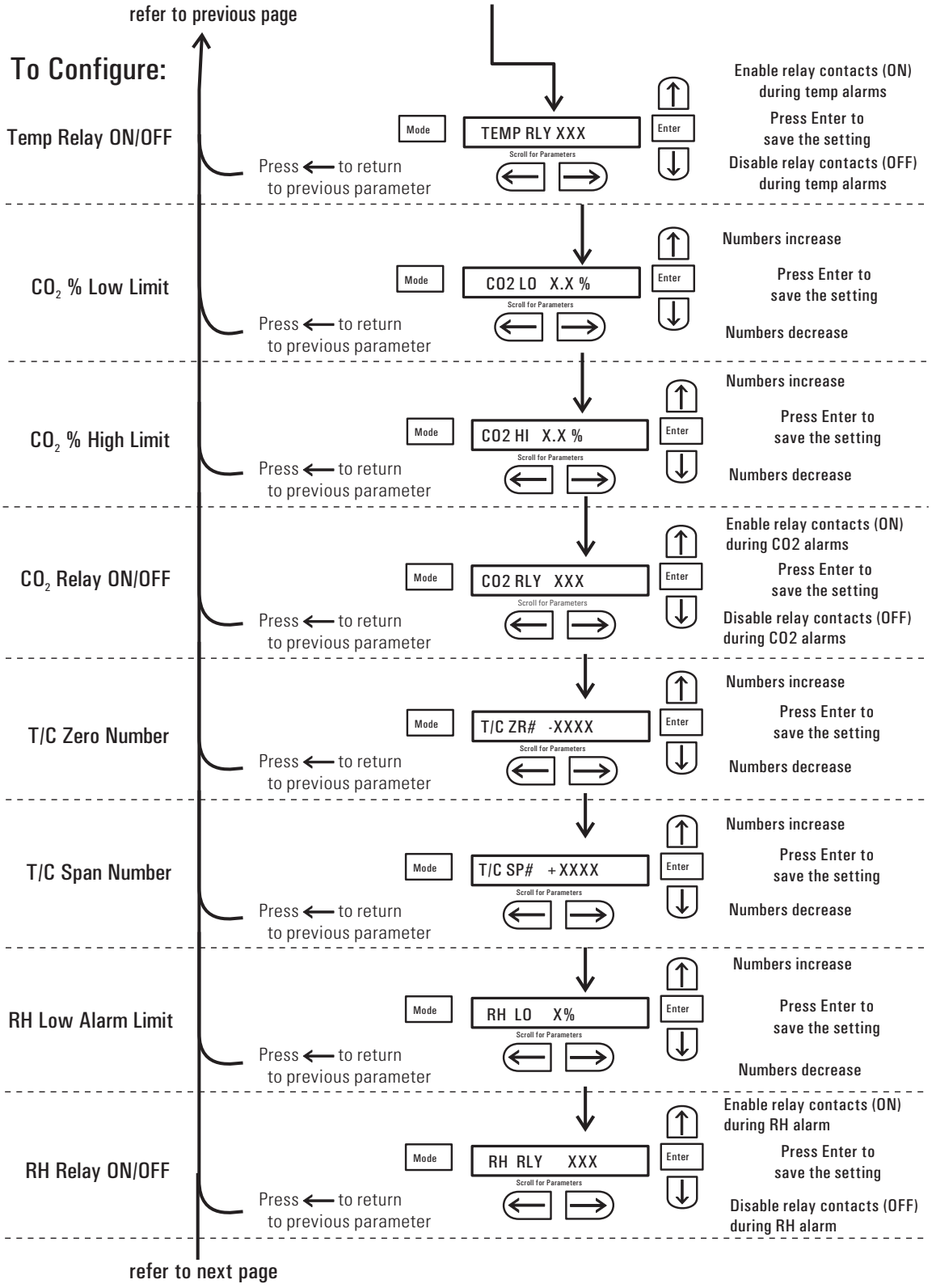

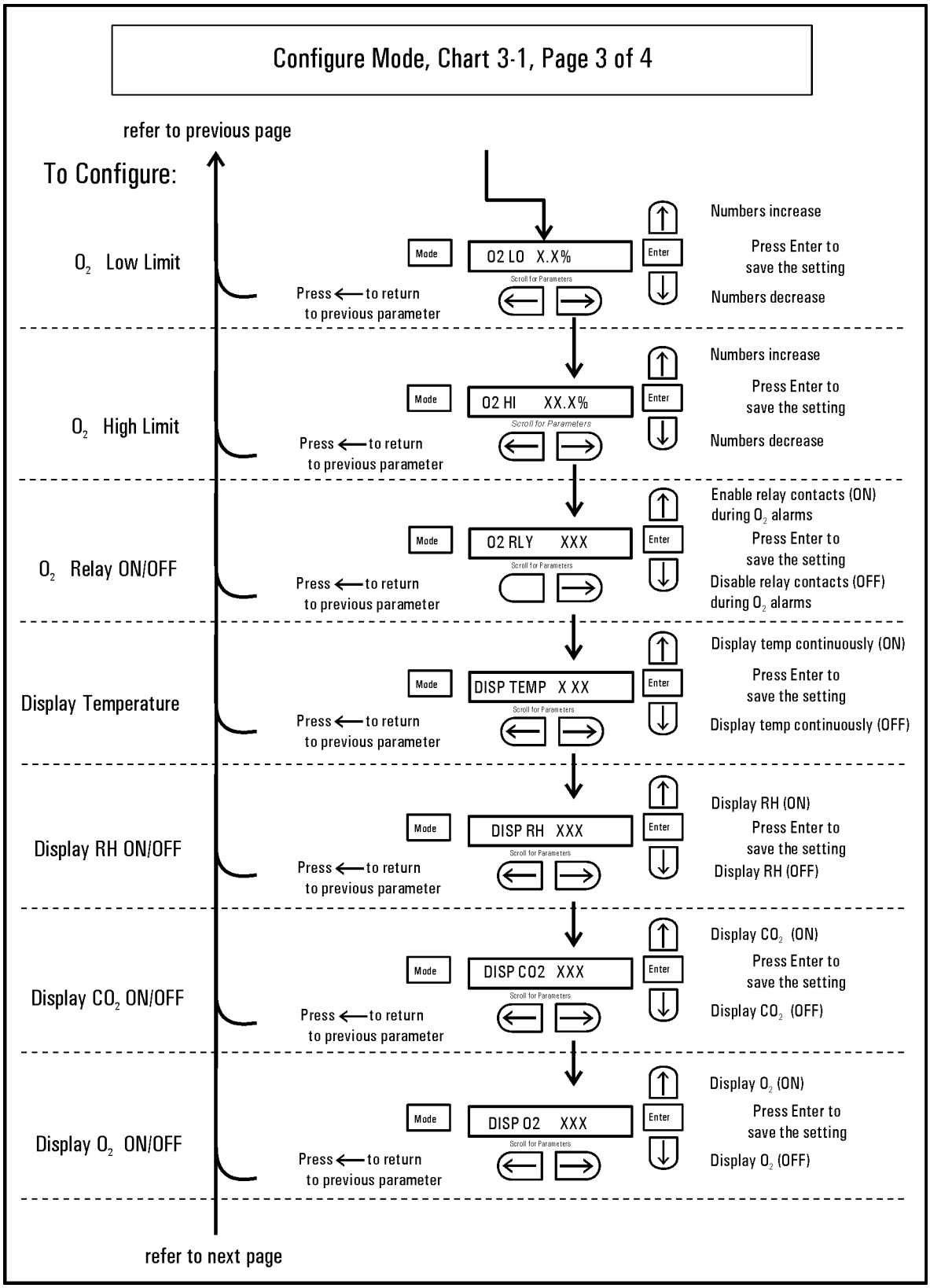
Configure Mode, Chart 3-1, Page 3 of 4
refer to previous page
To Configure:
O2 Low Limit
Mode
O2 LO X.X%
Enter
Scroll for Parameters
Press ← to return to previous parameter
Numbers increase
Press Enter to save the setting
Numbers decrease
O2 High Limit
Mode
O2 HI XX.X%
Enter
Scroll for Parameters
Press ← to return to previous parameter
Numbers increase
Press Enter to save the setting
Numbers decrease
O2 Relay ON/OFF
Mode
O2 RLY XXX
Enter
Scroll for Parameters
Press ← to return to previous parameter
Enable relay contacts (ON) during O2 alarms
Press Enter to save the setting
Disable relay contacts (OFF) during O2 alarms
Display Temperature
Mode
DISP TEMP X XX
Enter
Scroll for Parameters
Press ← to return to previous parameter
Display temp continuously (ON)
Press Enter to save the setting
Display temp continuously (OFF)
Display RH ON/OFF
Mode
DISP RH XXX
Enter
Scroll for Parameters
Press ← to return to previous parameter
Display RH (ON)
Press Enter to save the setting
Display RH (OFF)
Display CO2 ON/OFF
Mode
DISP CO2 XXX
Enter
Scroll for Parameters
Press ← to return to previous parameter
Display CO2 (ON)
Press Enter to save the setting
Display CO2 (OFF)
Display O2 ON/OFF
Mode
DISP O2 XXX
Enter
Scroll for Parameters
Press ← to return to previous parameter
Display O2 (ON)
Press Enter to save the setting
Display O2 (OFF)
refer to next page

Configure Mode, Chart 3-1, Page 4 of 4

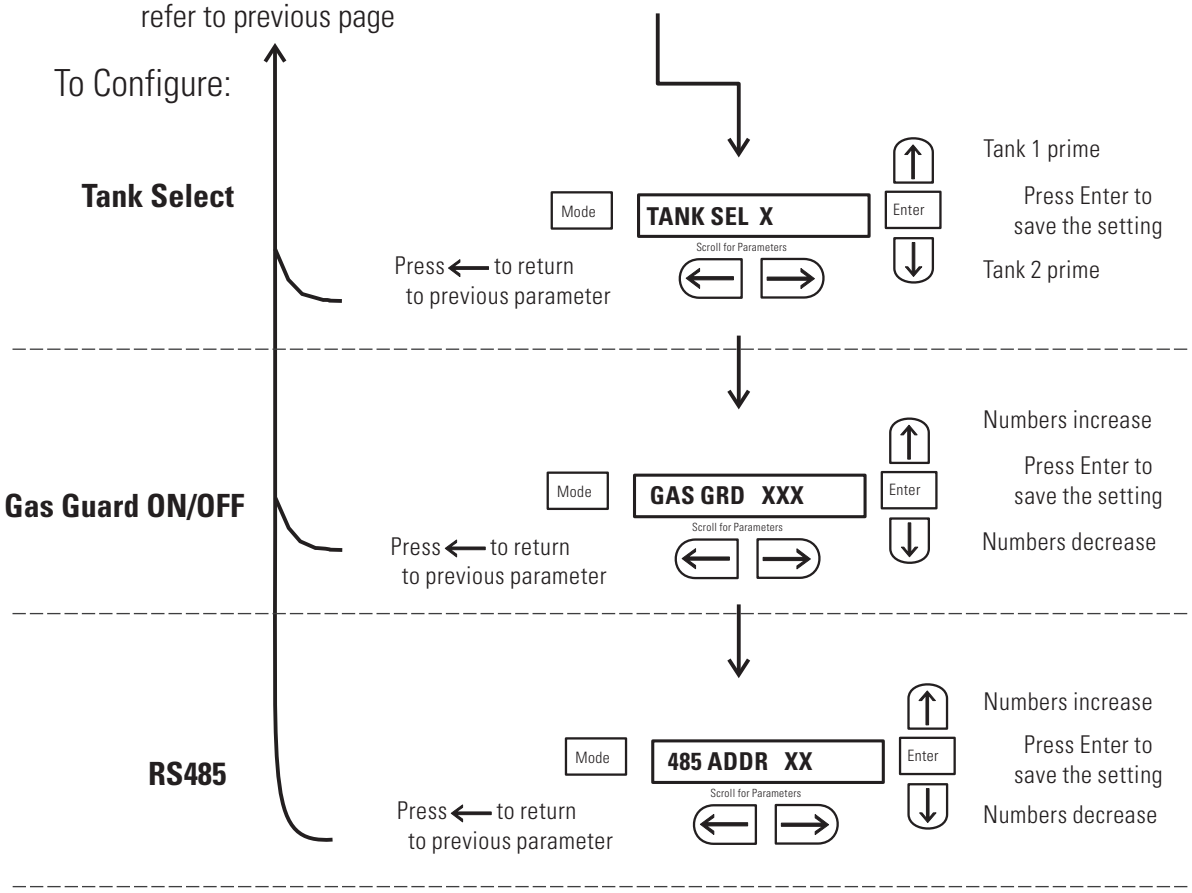

Section 4 Alarms

The Model 3100 Series incubator alarm system is shown in the table below. When an alarm is active, the message appears in the LED message center. Pressing Silence disables the audible alarm for the ringback period. However, the visual alarm continues until the incubator returns to a normal condition. The alarms are momentary alarms only. When an alarm condition occurs and then returns to normal, the incubator automatically clears the alarm condition and the message center.

When multiple alarm conditions occur, active messages are displayed in the message center one at a time, updating at 5 second intervals. Pressing Silence during multiple alarms causes all active alarms to be silenced and to ring back in 15 minutes.

Table 4-1. Alarms

Description	Message	Delay	Ringback	Relay
No alarm condition exists	SYSTEM OK/CLASS 100	---	---	---
CO2 System Auto Calibrating	CO2 AUTO CAL	---	---	---
Temp > Otemp Setpoint (See Sect. 1)	SYS IN OTEMP	0 min	15 min	Yes
Temp Control Sensor Fault (See Sect 4)	TSNSR1 ERR	0 min	15 min	No
Over Temp Sensor Fault (See Sect 4)	TSNSR2 ERR	0 min	15 min	No
CO2 Sensor Fault (See Sect 4)	CO2 SNSR ERR	0 min	15 min	No
O2 Sensor Fault (O2 option, see Sect 4)	O2 SNSR ERR	0 min	15 min	No
O2 Sensor Low (O2 option, see Sect 4)	REPL O2 SNSR	0 min	--- *	No
CO2 Sensor cannot be calibrated (IR option, Sect. 4)	REPL IR SNSR	0 min	15 min	No
Replace HEPA filter reminder – set time expired (See Sect. 3)	REPLACE HEPA	0 min	--- *	No
Water low in jacket (See Sect. 1)	ADD WATER	0 min	15 min	No
Inner Door is Open (See Sect. 4)	DOOR IS OPEN	15 min	15 min	No
CO2 > CO2 High Tracking Alarm	CO2 IS HIGH	15 min	15 min	Programmable
CO2 < CO2 Low Tracking Alarm	CO2 IS LOW	15 min	15 min	Programmable
TEMP > TEMP High Tracking Alarm	TEMP IS HIGH	0 min	15 min	Programmable
TEMP < TEMP Low Tracking Alarm	TEMP IS LOW	15 min	15 min	Programmable
O2 > O2 High Tracking Alarm (O2 option)	O2 IS HIGH	15 min	15 min	Programmable
O2 < O2 Low Tracking Alarm (O2 option)	O2 IS LOW	15 min	15 min	Programmable
RH < RH Low Limit Alarm (RH option)	RH IS LOW	30 min	15 min	Programmable
CO2 Auto-Zero Fault (IR option, see Sect. 4)	IR AUTOZ ERR	0 min	15 min	No
Tank 1 is low, switch to Tank 2 (Gas Guard)	TANK1 LOW	0 min	---	No
Tank 2 is low, switch to Tank 1 (Gas Guard)	TANK2 LOW	0 min	---	No
Both tanks are low (Gas Guard)	TANK 1 and 2 LOW	0 min	15 min	No

- All alarm delays and ringback times are +/- 30 seconds -
**Visual Alarm Only*

Inner Door Open Alarm

When the incubator's inner door is opened, heat and CO_2 injection are disabled. The door must be securely latched for heat and CO_2 injection to resume after a door opening. If the door is latched yet the display still shows DOOR IS OPEN, or if the door is unlatched and the display does not show DOOR IS OPEN, the door switch could be faulty.
Call Technical Services.

Sensor Fault Alarms

The microprocessor in the incubator continually scans all available sensors, except the O_2 (see Section 4), to ensure proper operation. Should an error be detected, the incubator sounds an alarm and displays the appropriate message. If such an alarm occurs, contact your local distributor or the Technical Services department.

TSNSR1 ERR

If the microprocessor determines that the temperature control precision thermistor is under-range or over-range, TSNSR1 ERR appears in the display, the visual alarm flashes, the audible alarm sounds, and the chamber and door heaters are disabled.

TSNSR2 ERR

If the microprocessor determines that the over temperature precision thermistor is under-range or over-range, TSNSR2 ERR appears in the display, the visual alarm flashes, the audible alarm sounds. If the independent over temperature protection circuit determines that the thermistor is over-range, SYS IN OTEMP alternates in the display and the chamber and door heaters are disabled.

REPL O2 SNSR

On units equipped with the O_2 system, the microprocessor checks the remaining life of the O_2 sensor whenever O2 calibration @ 20.7% is performed. After the O2 sensor declines to less than 43% (typical) of its life expectancy, REPL O2 SNSR appears in the display and the visual alarm flashes. This alarm alerts the user to replace the O_2 sensor at the earliest convenience (Section 5). The unit will continue to function for some length of time.

O2 SNSR ERR

After the O_2 sensor declines to the point that control cannot be accurately performed, an O2 SNSR ERR appears in the display, the visual alarm flashes, the audible alarm sounds, and the chamber and O_2 control is disabled. The O_2 control and alarms can be disabled by changing the setpoint to 21.0% (Section 1) or replacing the O2 sensor fuel cell (Section 5).

CO2 SNSR ERR

If the cables or connectors between the main microprocessor board and the CO_2 sensor, or between the CO_2 board and the sensor head on I/R CO_2 units become loose or disconnected, the CO2 SNSR ERR alarm will occur.

I/R Units

On I/R incubators, the red light on the I/R module (see Figure 5-8 for the module circuit board location) is lit continuously if communication is lost between the CO_2 board and the sensor head. The CO_2 display is locked at 00.0 without injection. Turning the incubator off and on will not clear the alarm. Only proper connections of all the components corrects the alarm.

IR AUTOZ ERR

On incubators equipped with an IR CO_2 control system, calibration is performed automatically once every 24 hours using the Auto Zero feature. If a CO2 correction of more than 0.45% is detected then the Auto Zero cycle is aborted and the IR AUTOZ ERR appears in the display, the visual alarm flashes, and the audible alarm sounds. The unit will continue to function using the last valid CO_2 correction value. The error may be cleared by performing the IR CO2 control system calibration (see Section 2) or waiting 24 hours for the next Auto Zero cycle.

Possible problems which will cause this alarm are:

- Auto Zero pump, orifice, filter or tubing will not allow air to the sensor.

  Possibilities are:

  ~ Defective or electrically disconnected air pump

  ~ Kinked auto zero vinyl tubing

  ~ Disconnected tubing between air pump and sensor

  ~ Plugged filter or orifice on auto zero assembly

  ~ Defective auto zero circuit

- Cabinet temperature has been increased significantly from a previous setpoint. (For example, the unit was calibrated and operating at 30°C and the setpoint is increased to 50°C). In this instance, calibrating the CO_2 will correct the alarm.

- There is high background CO_2 in the laboratory. This could be from leaks in the tank, regulator or vinyl CO_2 tubing.

- High CO_2 sensor calibration drift occurred. This requires replacement of the sensor.

WARNING Do not disassemble the IR CO2 sensor as there are no user-serviceable adjustments. ▲

REPL IR SNSR

If the Auto Zero feature cannot properly calibrate the sensor, then REPL IR SNSR appears in the display, the visual alarm flashes, the audible alarm sounds, and the chamber CO2 control disabled. The CO2 control and alarms can be disabled by changing the setpoint to 0.0% (Section 1) or replacing the IR CO2 sensor. Call Technical Services.

PREVENTIVE MAINTENANCE

Incubators

Your equipment has been thoroughly tested and calibrated before shipment. Regular preventive maintenance is important to keep your unit functioning properly. The operator should perform routine cleaning and maintenance on a regular basis. For maximum performance and efficiency, it is recommended the unit be checked and calibrated periodically by a qualified service technician.

The following is a condensed list of preventive maintenance requirements. See the specified section of the operating manual for further details.

We have qualified service technicians, using NIST traceable instruments, available in many areas. For more information on Preventive Maintenance or Extended Warranties, please contact Technical Services.

Cleaning and calibration adjustment intervals are dependent upon use, environmental conditions and accuracy required.

Tips for all incubators:

- Do NOT use bleach or any disinfectant that has high chlorine content.
- Use water with characteristics as described in Filling Water Jacket.
- Avoid spraying cleaner on the CO_2 sensor.
- Do not use powdered gloves for tissue cultures.

Preventive Maintenance for Water Jacket Incubators

Action	Daily	Weekly	Monthly	6 Months	Yearly	2 years
Check CO_2 and/or N_2 tank levels (tanks without optional gas guard monitor)	✓					
Inspect the inner and outer door latches and hinges for proper operation and excessive mechanical wear; inspect the line cord insulation and inner door silicone gasket for chips and cracks. Replace as required.					✓	
Check water level in humidity pan, ½" from top. See "Filling the Humidity Pan".		✓				
Check proper blower motor operation (air flow, noise, and vibration)		✓				
Verify and document CO_2, humidity and temperature calibration, as applicable. See Calibration section.					✓	
Verify O_2 calibration, as applicable. See Calibration section				✓		
Perform a complete decontamination procedure. Wipe down interior, shelves and side ducts with disinfectant. Change or clean blower wheel and scroll. Clean top duct. Clean humidity pan. Rinse everything well with sterile water. See "Cleaning the Interior, "Cleaning the Humidity Pan".	Before first use, after every service call and between experiments to prevent cross contamination *More frequent decontamination may be required, depending on use and environmental conditions*					
Change HEPA and gas filters, if applicable (*or as needed).* See "Installing Access Port Filter, "Installing Air Sample Filter", "Installing HEPA Filter".				✓		
Replenish rust inhibitor in water jacket. See "Adding/Replenishing Rust Inhibitor".						✓
Tubing Maintenance and Inspection: Inspect all tubing and connections & Replace any tubing that shows signs of degradation or damage.				✓		

Section 5 Routine Maintenance

Caution Before using any cleaning or decontamination method except those recommended by the manufacturer, users must check with the manufacturer that the proposed method will not damage the equipment. ▲

Warning It is the responsibility of the user to immediately clean up after all accidental spills of hazardous materials. Be certain to follow local EHS policies with regards to personal protective equipment, cleaning, and disposal. ▲

Cleaning the Interior

Use an appropriate disinfectant, such as quaternary ammonium. All articles and surfaces must be thoroughly cleaned, rinsed and rough-dried.

Warning Alcohol, even a 70% solution, is volatile and flammable. Use it only in a well ventilated area that is free from open flame. If any component is cleaned with alcohol, do not expose the component to open flame or other possible hazard. Allow the alcohol to fully dry before turning power on. ▲

Warning Do not spray the T/C sensor with flammable solutions. The internal temperature of the CO_2 sensor is approximately 150°C when the unit is in operation. Allow sufficient time for the sensor to cool before cleaning. ▲

Caution Do not use strong alkaline or caustic agents. Stainless steel is corrosion resistant, not corrosion proof. Do not use solutions of sodium hypochlorite (bleach), as they may also cause pitting and rusting. ▲

Note If condensation is visible on the ceiling of the chamber, yet the message center does not display ADD WATER, then the liquid level switch could be faulty. Call Technical Services.

Warning If the unit has been in service, disconnect the power cord from both the unit and the power source, turn off all gas regulators, and allow the unit to cool before disinfecting. ▲

Cleaning the Interior (continued)

1. Remove the shelves, access port filter and side duct sheets. Remove the temperature sensors and the air sample filter tubing from the back of the blower scroll. If unit is equipped with the optional RH sensor, unfasten it from the clip on the top duct. See Figure 5-1.

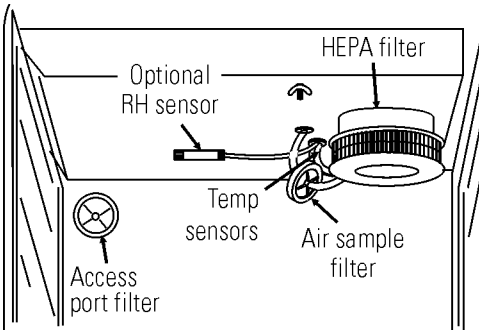

Figure 5-1. Sensor and Filter Locations

2. Remove the filter from the air sample filter tubing. Carefully pull down and remove the HEPA filter.
3. Remove the wingnuts securing the top duct to the interior. Carefully slide the top duct down and off the temperature sensor, air sample filter tubing (and RH sensor, if applicable).
4. Wash the shelves, ducts, wingnuts and stopper with disinfectant and rinse with sterile water. **Option:** Autoclave shelves, ducts and wingnuts.
5. Remove the blower scroll by first pushing the black lever clip closest to you toward the scroll. Then turn the scroll to the right to disengage it from the blower scroll plate. Some manipulation may be required as the alignment holes are keyhole-shaped.
6. Remove the remaining wingnut, then pull down on the blower wheel. If a new wheel and scroll are to be used, discard the old ones per local EHS policies and procedures. If the old ones are to be reused, wash all parts with disinfectant and rinse with sterile water.
7. Remove the blower scroll plate by first pushing the black lever clip toward the chamber ceiling. Then turn the plate to the left to disengage it from the alignment keyholes. Clean as above, or autoclave.
8. Wash the cabinet interior with disinfectant starting at the top and working down. Wash the inner door both inside and out. The cabinet and door must be rinsed with sterile water until the disinfectant has been removed. After the cabinet has been rinsed, spray with 70% alcohol.
9. Reinstall the blower scroll plate by aligning it with the larger end of the keyholes and turning it to the left to lock it on. Pull the black lever clip downward from the ceiling.
10. Install the blower wheel onto the motor shaft, aligning the d-shaped flat sides of each. See Figure 5-2. Secure the blower wheel with the wingnut. Make sure the wheel turns freely.

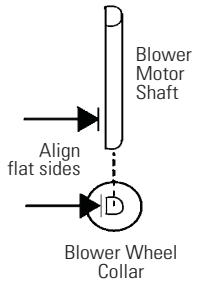

Figure 5-2. Align

Cleaning the Interior (continued)

11. Locate the blower scroll over the blower wheel into the larger end of the keyholes on the scroll plate. Turn the scroll to the right to lock it into the keyholes. Pull the black lever clip closest to you toward the front of the unit.

12. Install the top duct by feeding the temperature sensors, air sample tubing (and RH sensor, if applicable) through the appropriate holes in the duct as it is raised to the top of the chamber. Be careful not to pull the grommets through the duct. See Figure 5-3.

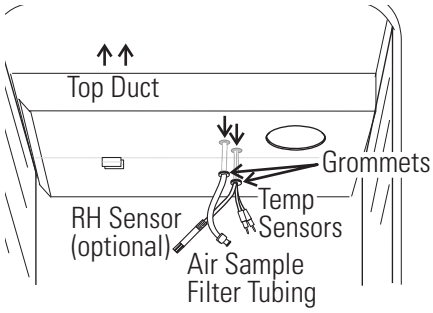

Figure 5-3. Feed Through Holes

13. Locate the mounting studs and blower scroll into the appropriate holes in the top duct and install the wingnuts to secure the duct.

14. Install the air sample filter onto the top duct tubing.

15. Carefully pull the temperature sensors and air sample filter tubing down until they can be inserted approximately 1 inch into the appropriate holes in the back of the blower scroll. If applicable, place the optional RH sensor into the corresponding clip on the top duct. See Figure 5-4.

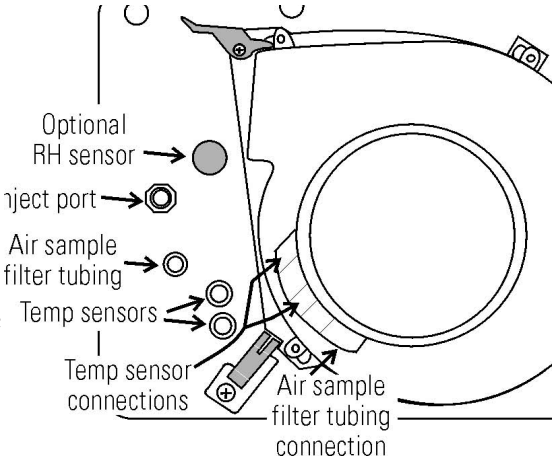

Figure 5-4. Underside View of Chamber Ceiling

16. Install the HEPA Filter.

17. Wipe down the interior of the incubator with 70% alcohol, including the glass door and gasket.

Caution Do not spray or wipe the sensors. ▲

18. Install the left and right ducts, and the access port stopper with filter, spraying each with 70% alcohol (do not saturate).

19. Install the shelves and spray with 70% alcohol.

20. Plug the incubator in and turn the power switch on. Allow the unit to run with the chamber empty, heat only, for 24 hours before returning to service.

Cleaning Cabinet Exterior

1. Use a lint-free cloth dampened in mild soapy water to clean the exterior, especially the door handle. Do not use any liquids (including spray cleaners) on the control panel; instead clean with a dry microfiber cloth.
2. Wipe the surfaces (except control panel) twice using a clean cloth dampened in clear water.
3. Wipe dry using a clean cloth.

Cleaning Humidity Pan

Clean the humidity pan with soap and water and a general use laboratory disinfectant. Rinse with sterile water and spray with 70% alcohol.
The humidity pan may be autoclaved.

Reversing the Door Swing

For side-by-side operation or changing lab layouts, the inner and outer doors are field-reversible. The procedure is written from the prospective of changing the door swing from a left-hand to a right-hand swing. All screw holes are pre-drilled for reversing the door. A Phillips screwdriver is required.

Warning The electronics drawer contains hazardous voltages. If the unit has been in service, disconnect the power cord from both the unit and the power source, turn off all gas regulators, disconnect all tubing and any other connections from the rear of the electronics drawer, and allow the unit to cool before reversing the door swing. ▲

1. Referring to Illustration A following, open the outer door and remove it by lifting it off the hinge pins. Place the door on its face on a padded surface to prevent scratches.
2. Remove the hinge pins and two outer door hinges identified in the illustration.
3. Use the Phillips screwdriver to remove and save the four nylon screws from the outer door hinge mounting holes on the right side of the door frame.
4. Rotate the outer door hinges 180° and install them loosely, in the locations where the nylon screws were just removed, opposite their original positions.
5. Install the saved nylon screws in the previous locations of the outer door hinges.
6. Remove and save the four nylon screws from what will be the new locations for the inner door hinges.

Reversing the Door Swing (continued)

7. Remove the electrical connector on the top of the inner door hinge by carefully pulling up the black strain relief.

8. Refer to Figure 5-5. The heater wiring connector is of yellow rubber which should be visible when the strain relief is moved upward as shown. See connector manufacturer's instructions in Section 11 of this manual.

9. Grasp the upper portion of the yellow connector and pull it up and out of the hinge socket.

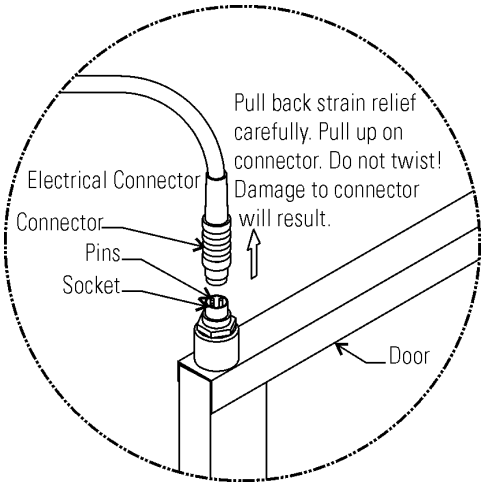

Figure 5-5. Connector

Caution The frame along the hinge side of the inner glass door has electrical connectors mounted on the frame at both the top and bottom of the door. Be careful not to damage the connectors by resting the weight of the door on them. Place the inner glass door on a flat surface where it cannot be damaged. ▲

10. Release the inner door latch. While holding the inner door securely, remove the upper door hinge. Lift the inner door carefully out of the bottom hinge and set it aside.

11. The upper inner door hinge will be inverted and become the lower inner door hinge when the hardware is reassembled. At this time, remove the 5/8" black plastic bushing from the hinge. This bushing will be inserted in the top hinge when the door is installed on the right side of the cabinet.

12. Remove the lower inner door hinge. This hinge will be inverted and become the upper inner door hinge when the hardware is reassembled. Also, remove the 1" long white plastic bushing from the center of the hinge and insert it into the hinge removed in step above.

13. The shoulder of the white bushing must be on top as shown in Illustration B. Install the black plastic bushing into the hinge just removed. See Figure 5-6.

14. Remove the two nylon screws opposite the door latch.

15. Remove the door strike plate and install the two nylon screws just removed, into the vacant holes.

16. Remove the two outer Phillips screws on the frame just beneath the control panel. Remove only the two outer screws and pull the electronics drawer out about one inch.

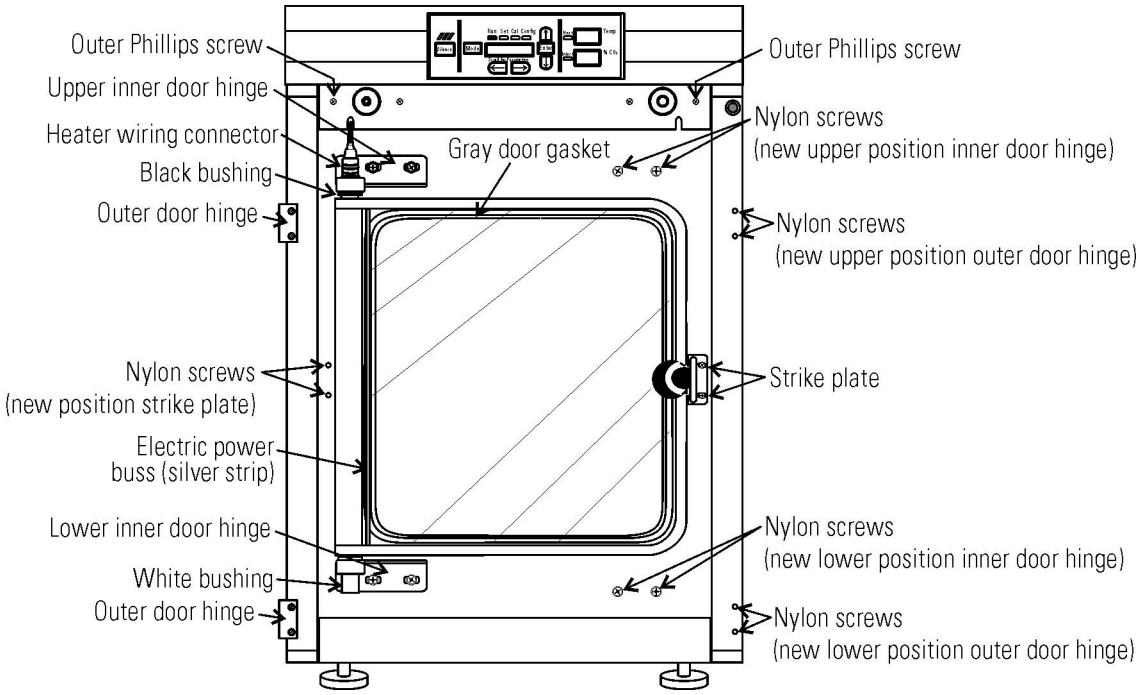

Illustration A. Disassembly

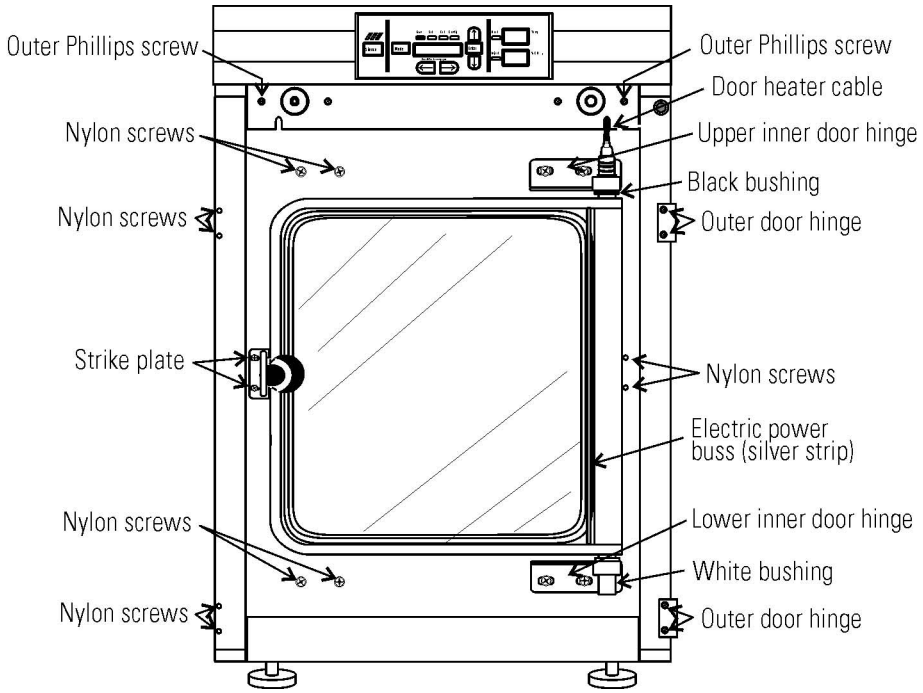

Illustration B. Reassembly

Reversing the Door Swing (continued)

Refer to Illustration B on the previous page.

17. Move the door heater cable to the slot on the right side of the electronics drawer.

18. Push any excess cable into the area under the electronics drawer to avoid damaging the cable when drawer is pushed back in and secured.

19. Install the lower inner door hinge in the drawing. This was the upper inner door hinge removed in Step 10 and should have the white plastic bushing installed. Do not completely tighten the screws.

20. Insert the inner door into the lower hinge with the latch to the left. Align the door to chamber opening and place upper hinge in position. This was the lower inner door hinge removed in Step 12 with the black plastic bushing installed.

21. Insert the screws into the hinge but do not completely tighten them.

22. Match the pins on the yellow connector with the socket on the door. Press the connector completely into the socket and slide the strain relief down until no yellow is visible on the plug (Figure 5-6).

23. Slide the electronics drawer back in, being very careful to place the door heater cable back into the provided slot so that the drawer does not pinch the cable (Figure 5-6). Secure the electronics drawer with the screws removed above.

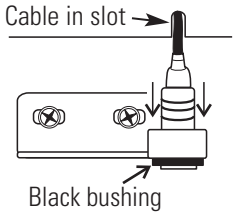

Figure 5-6. Connector

24. Align the door by checking that the gasket is making contact with the glass door, on the latching side, top and bottom. When you close the door you can feel where the glass door is making contact with the gasket. The gasket should be making contact against the glass door and not overlapping onto the metal frame.

25. When both inner door hinges are in place with the hinge screws still loosened, push up on the bottom hinge. This will shift both hinges and the inner door upward. Tighten the hinge screws.

26. Attach the strike plate, aligning it so the knob secures the door against the gasket.

27. Re-install the hinge pins.

28. Install the nylon screws in the previously upper and lower inner hinge locations.

29. Mount the outer door onto the hinge pins. Close the door to verify that the door is located properly. Open and hold the outer door in place while tightening the hinge screws before closing the door.

Reversing the Door Swing (continued)

30. Plug the power cord back into unit and the the dedicated, grounded circuit. Turn power switch on. Allow the unit to run until the temperature stabilizes. Check for proper unit operation, especially inner door heater and gasket seal. Clean and disinfect the unit before returning to service.

Replacing Fuses

Warning The electronics drawer contains hazardous voltages. Replacing the fuses should be performed by qualified personnel only. If the unit has been in service, disconnect the power cord from both the unit and the power source, turn off all gas regulators, disconnect all tubing and any other connections from the rear of the electronics drawer. ▲

There are three fuses in the incubator that can be replaced. To replace a fuse:

1. Open the exterior cabinet door.

2. Remove two screws as shown. See Figure 5-7.

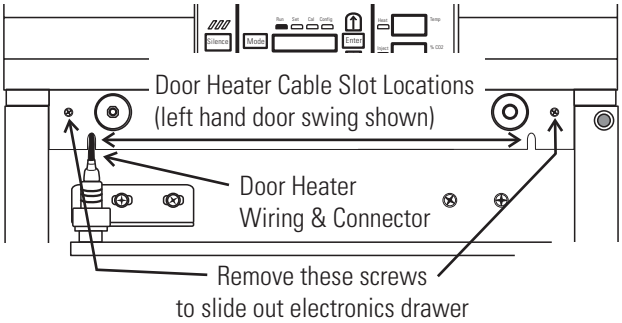

Figure 5-7. Screw Locations

3. Carefully slide out electronics drawer.

There are two fuses on the main microboard labeled F1 (for 24 VAC Door Heater) and F4 (for 24 VAC Collar Heater). Refer to Figure 5-8 for the location of the main microboard. Remove the fuse and replace it with a new one of the same specification. Refer to Table 5-1.

Replacing Fuses (continued)

Table 5-1. Fuses and Specifications

Fuse #	Manufacturer Part #	Amperage Rating	Rupture Speed	IEC Letter Code
F1	BUSS GMC-3.5 A	3.5 Amp	Time-Lag	T
F4	BUSS GMC-2.5 A	2.5 Amp	Time-Lag	T
115 VAC ACC	BUSS GMC-1.0 A	1.0 Amp	Time-Lag	T
230 VAC ACC	BUSS BK-GMC-500 mA	0.5 Amp	Time-Lag	T

The other replaceable fuse is the accessory outlet fuse mounted to the floor of the electronics drawer. To locate the fuse, refer to Figure 5-8. Remove the fuse and replace with a new one of the same specification.

1. When the fuse has been replaced, slide the electronics drawer back in, being very careful to place the door heater cable back into the provided slot (Figure 5-7) so that the drawer does not pinch the cable.

2. Replace the two screws removed earlier.

3. Close the exterior door.

4. Plug the power cord back into unit and dedicated, grounded circuit.

5. Turn on power switch. If the unit operates properly, it may now be returned to service.

There is one fuse in the incubator that is not replaceable. This fuse is intended for catastrophic failure only and is located on the power supply circuit board in the electronics drawer. See Figure 5-8. If this fuse is blown, the power supply must be replaced. Contact the factory for more information.

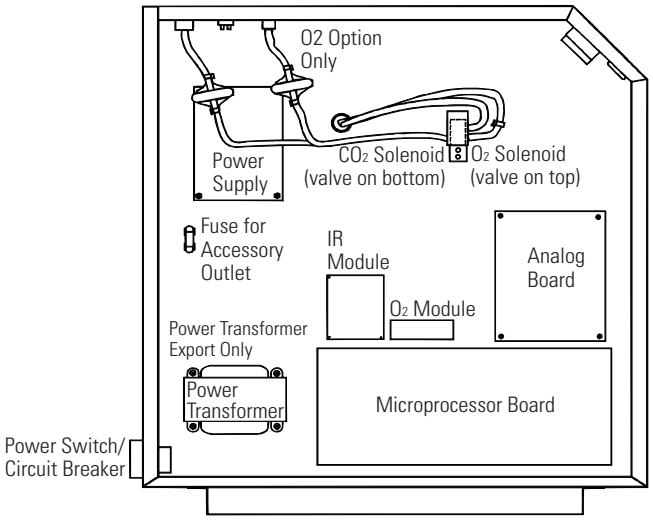

Figure 5-8. Electronics Drawer

HEPA Filter Maintenance

Replace the HEPA filter when the REPLACE HEPA reminder is displayed by following the Installing HEPA Filter procedures of Section 1. Carefully pull down the HEPA filter to remove, and discard it per local EHS policies and procedures. Afterwards, clear the visible alarm and display, and reset the timer by following the NEW HEPA Filter procedures of Section 3. The REPLACE HEPA reminder can be set to alarm after a specified time from 1 to 12 months. The reminder default is the factory recommended setting of 6 months. For details, see Section 3.

Replacing Air Sample Filter

The air sample filter should be replaced whenever the HEPA filter is replaced. On the inside of the chamber, inserted into the back of the blower scroll, is the air sample filter and its connecting tubing. Disengage the tubing from the back of the scroll, then remove the filter from the tubing and discard per local EHS policies and procedures. Install the new filter. Connect it securely to the air sample filter tubing, then insert the tubing into the back of the blower scroll.

Replacing Access Port Filter

The access port filter should be replaced whenever the HEPA filter is replaced. The filter is connected to the stopper in the upper left corner of the chamber back wall. Remove the filter from the connecting tube and discard per local EHS policies and procedures. Install the new filter.

Draining Water Jacket

Note Although the rust inhibitor is biodegradable, be certain to follow local EHS policies with regards to personal protective equipment, cleaning, and disposal. ▲

Caution For stacked incubators, completely drain the top unit before draining the bottom unit in order to maintain the lowest possible center of gravity. ▲

1. Turn the unit off. Remove the plug from the power source.
2. Remove the front cover plate below the door. There are small flatblade screwdriver pry slots on each end of the plate to help remove it. See Figure 5-9.

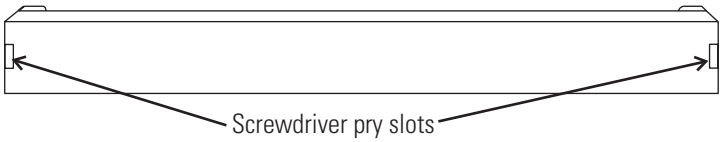

Figure 5-9. Front Cover Plate Below the Door

Draining Water Jacket (continued)

3. If present, remove the drain plug.

4. Connect the hose barb insert to the drain on lower front of the water jacket and to the drain hose.

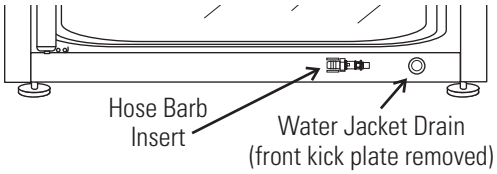

Figure 5-10. Water Jacket Drain and Hose Barb Insert

5. After water jacket has finished draining, remove the hose barb insert and secure on the front of the unit. See Figures 5-10 and 5-11.

Figure 5-11. Hose Barb Insert

Warning After the jacket is empty, be certain to clean up any water that may have spilled onto the floor during this process to prevent a possible slip hazard. ▲

6. Install cover plate.

7. To fill the water jacket, see Section 1. Be sure to add the rust inhibitor to the water when filling. Instructions follow in this section.

Adding /Replenishing Rust Inhibitor

Model 3100 Series incubators are shipped from the factory with a rust inhibitor added to 0.2 gallons (0.8 liters) of water in the jacket. The rust inhibitor must be replenished every 2 years. Mix 1 bag/bottle of the rust inhibitor with 1 gallon (3.8 liters) of water (quality as described in Filling Water Jacket, Section 1).

Test the liquid level switch by draining 1.5 gallons (5.7 liters) of water from the jacket per Draining Water Jacket instructions above. If the message center does not display ADD WATER, then the liquid level switch could be faulty. Call Technical Services.

Add the rust inhibitor/water solution to the water jacket and continue to fill the jacket per Filling Water Jacket, Section 1.

Rust Inhibitor (0.5 lb.) bag	1900100
Rust Inhibitor (800ml) bottle (use in units with a cooling coil)	1900101

Replacing O_2 Sensor

Warning Handle the O_2 sensor fuel cell very carefully as it can be easily damaged. Do not install the O_2 sensor fuel cell if its shipping box is damaged or it has fallen on the floor as mechanical shock or vibration may cause irreversible internal structural damage to the O_2 sensor fuel cell. Do not disassemble the O_2 sensor fuel cell as there are no user-serviceable adjustments. If the liquid electrolyte leaks due to sensor breakage, care should be taken in handling the sensor as the solution contains lead acetate which is harmful to humans. ▲

Warning Contact with this liquid should be avoided. In case the liquid electrolyte contacts the skin or clothing, wash with soapy water and rinse generously with plain water. If the liquid electrolyte contacts the eye, flush with water for at least 15 minutes and obtain immediate medical assistance. In case of breathing in of the electrolyte, flush the nasal cavity thoroughly with water and seek immediate medical assistance. If the electrolyte is swallowed, rinse the mouth thoroughly with water and seek immediate medical assistance. ▲

The O_2 sensor is located on the blower scroll plate in the chamber of the unit. To replace it, see Figure 5-12 and 5-13 and follow the steps below.

Warning If the unit has been in service, disconnect the power cord from both the unit and the power source, turn off all gas regulators and allow the unit to cool before replacing the O_2 sensor fuel cell. ▲

1. Remove the top duct by removing 2 wingnuts.

2. Locate the sensor on the scroll plate.

Warning Before removing the old O_2 sensor fuel cell, inspect it for any visual signs of damage. If the liquid electrolyte is leaking, follow local EHS policies with regards to personal protective equipment, cleaning and disposal. ▲

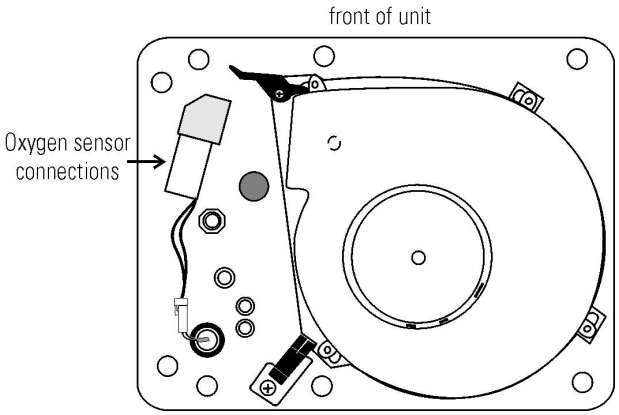

Figure 5-12. Underside View of Top of Chamber

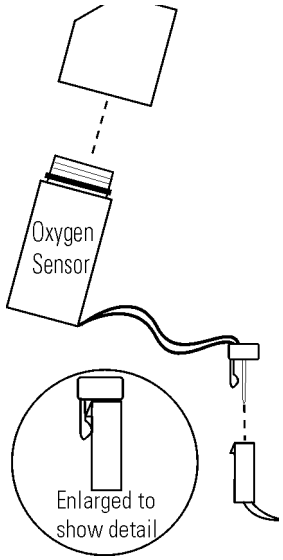

Figure 5-13. Detail

Replacing O_2 Sensor (continued)

3. Lift up slightly on the tab securing the sensor wire terminal connection. Be careful not to break the locking tab off. See enlarged detail of Figure 5-13.

4. Disconnect the connectors from each other.

5. The O_2 sensor fuel is screwed into the brass fitting. Unscrew the old sensor and discard per local EHS policies and procedures.

Warning Before installing the new O_2 sensor fuel cell, inspect it for any visual signs of damage. If the liquid electrolyte is leaking, handle per local EHS policies with regards to personal protective equipment, cleaning, and disposal. ▲

6. Screw the new O_2 sensor fuel cell in firmly. Be careful not to cross-thread.

7. Orient the connectors as shown in Figure 5-13 and connect.

8. Install the top duct and tighten the two wingnuts.

9. Plug the power cord into the unit and the dedicated, grounded circuit. Turn the power switch on.

10. Calibrate the O_2 system using the O_2 CAL@20.7% method as described in Section 2.

11. Allow the unit to run until the temperature stabilizes. Check the O_2 and CO_2 operation and return the unit to service.

Section 6 Factory Installed Options

Remote Alarm Contacts

A set of relay contacts are provided to monitor alarms through an RJ-11 telephone style connector on the back of the cabinet. Refer to Figure 1-13 for the location of the alarm connector.

The remote alarm provides a NO (normally open) output, a NC (normally closed) output and COM (common). Refer to Figure 6-1.

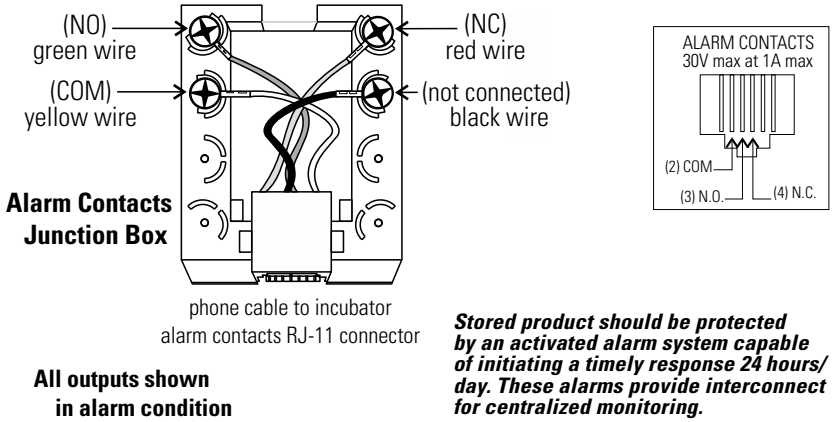

Figure 6-1. Contacts

The contacts will trip on a power outage or an over temperature condition. The contacts may also be programmed to trip or not trip on temperature alarms, CO_2 alarms, O_2 alarms and RH alarm. See Section 3, System Configuration.

Note After connecting the incubator to the external alarm system, verify proper alarm operation by simply placing the incubator power switch to its off position to simulate a power outage condition. ▲

Connecting the RS485 Interface (190523)

All incubator models can be purchased with the RS485 communications option. This option allows the incubator to be directly connected to a Model 1535 alarm system without the use of a communications module. A junction box is provided with each RS485 option. Refer to Figure 6-2 for wiring details.

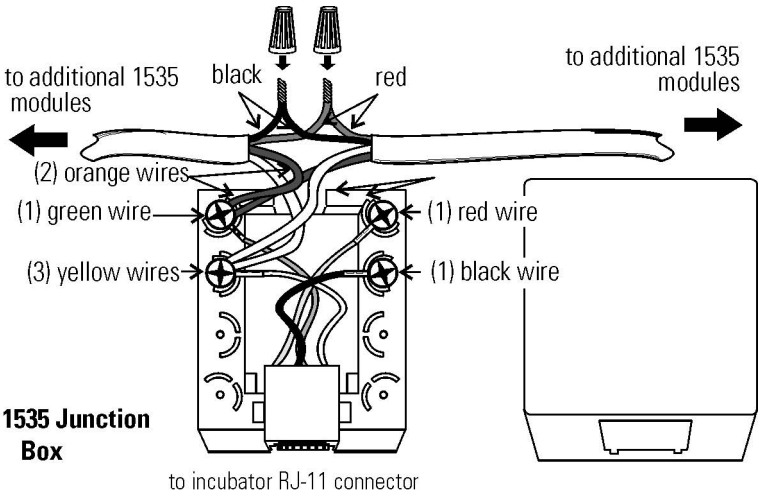

Figure 6-2. Wiring

To allow the incubator and the 1535 to communicate, an address must be allocated on the 1535. Refer to the 1535 operating manual. The same address number must be assigned to the incubator. Refer to Section 3 of this manual, System Configuration.

Note After connecting the Model 1535 Alarm System to the incubator, verify that there are no RS485 communication errors per the Model 1535 operating manual. Simulate incubator failures of each module to verify proper Model 1535 operation. ▲

Connecting Analog Output Boards

The analog output board option allows the incubator to output analog signals representing the air temperature of the cabinet, the CO_2 content, the O_2 content, and the relative humidity, depending upon which systems are in the incubator. There are three different analog output board options available : 0-1 V, 0-5 V, or 4-20 mA signals. Negative display readings will output 0 V. See Table 6-1 for output specifications of the three boards.

Table 6-1. Analog Output Board Specifications

	190512 4-20mA Output Scaling 4-20mA Equals	190544 0-1V Output Scaling 0-1V Equals	190543 0-5V Output Scaling 0-5V Equals
Temp	00-100°C	0.0-100°C	0.0-100°C
RH	0-100%RH	0-100%RH	0-100%RH
CO2	0.0-100.0%CO@	0-100.0%CO2	0-100.0%CO@
O2	0.0-100.0%O2	0-100.0%O2	0-100.0%O2

For the 0-1 V and 0-5 V boards, the recording device must supply a load >/=1000 ohm. For the 4-20 mA board, the recorder must supply a load of </=100 ohm. The outputs do not have isolated grounds.

To wire in the analog output board, a 22-gauge, 3-conductor shielded cable (Part # 73041) is recommended, maximum length 50 ft (15.2 m).

Warning The electronics drawer contains hazardous voltages. Opening the drawer and/or wiring in an analog board should be performed by qualified personnel only. If the unit has been in service, disconnect the power cord from both the unit and the power source, turn off all gas regulators, and disconnect all tubing and any other connections from the rear of the electronics drawer. ▲

Connecting Analog Output Boards (cont.)

1. Open the exterior cabinet door and remove the two screws shown in Figure 6-3.

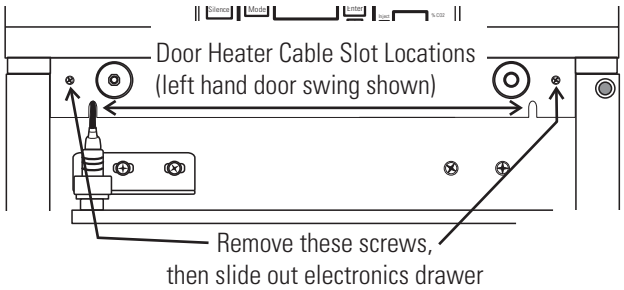

Figure 6-3. Screw Locations

2. Carefully slide out electronics drawer and locate the Analog Output board (Figure 6-4).

3. Each system monitored (Temp, CO_2, O_2, RH) requires two conductors. Feed the wire through the analog wiring inlet on the back of the drawer. See Figure 6-5.

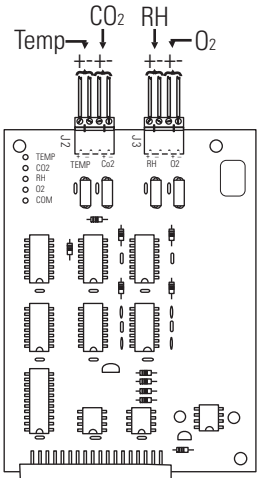

Figure 6-4. Analog Output Board

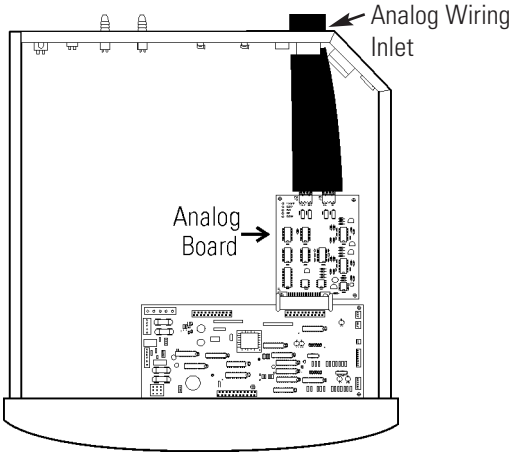

Figure 6-5. Analog Wiring Inlet

4. Strip the ends of each conductor and wire to the appropriate terminals of connectors J2 and J3 on the analog board.

5. When wiring is completed, slide the electronics drawer back in being very careful to place the door heater cable back into the provided slot so that the drawer does not pinch the cable. See Figure 6-3.

6. Replace the two screws removed earlier.

Note Accuracy of the analog outputs measured at the circuit board terminal strip with respect to the incubator display is ±1 unit. There is no calibration of the analog outputs by the incubator, so the instrument(s) connected to the analog outputs must be calibrated to match the incubator display before returning to service. ▲

Gas Guard for CO_2 or N_2 (190640/190642)

Model 3100 Series incubators can be equipped with a built-in gas guard system that will operate with either a CO_2 or a N_2 gas supply. Only one gas guard can be installed on each unit. The gas guard uses two pressure switches to continuously monitor the pressures of two independent CO_2 or N_2 supplies and automatically switches from one supply to the other when the supply pressure drops below 10 psig (68.95 kPa). The gas guard is not designed to be used with multiple incubators.

Both of the CO_2 or the N_2 gas supplies must be equipped with two-stage pressure regulators. The high pressure gauge at the tank should have a 0-2000 psig range and the low pressure gauge should have a 0-30 psig range. The gas supply to the incubator must be maintained at 15 psig (103.4 kPa) maximum. Gas pressures below 15 psig (103.4 kPa) may cause nuisance alarms to occur on incubators equipped with the built-in Gas Guard.

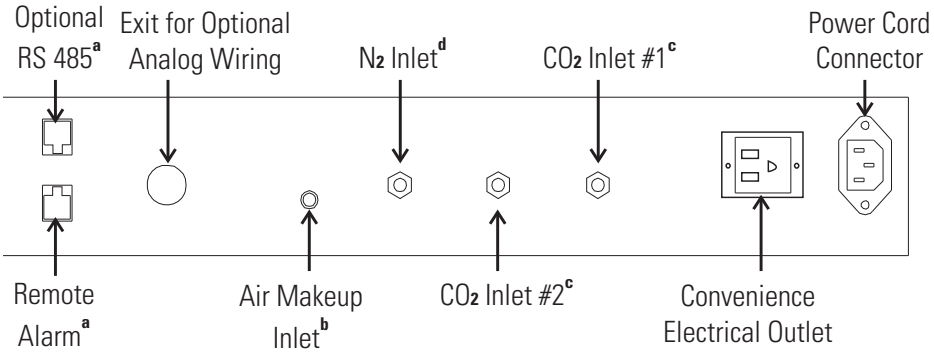

a RJ-11 telephone style connectors
b Used with optional IR sensor
c Used with optional Gas Guard system
d Used with optional O_2 sensor

Figure 6-6. Unit Back with All Connections

Connecting CO_2 Gas Supplies

The CO_2 inlets for a built-in gas guard are located on the rear of the electronics drawer (Figure 6-6). Using 1/4” ID tubing, connect one of the CO_2 supply tanks to the fitting labeled CO2 Inlet #1. Connect the second CO_2 supply tank to the fitting labeled CO2 Inlet #2. Install 3/8” hose clamps to secure the 1/4” ID tubing to the barbed fittings on the regulator and the rear of the electronics drawer.

Warning Check for leaks at all connections. ▲

Connecting N_2 Gas Supplies

Important When using Nitrogen (N2), the gas inlet labels on the back panel will be different than the standard configuration shown in Figure 6-6 as follows; (from left to right) CO2 INLET, N2 INLET #2, and N2 INLET #1. ▲

The N_2 inlets for a built-in gas guard are located on the rear of the electronics drawer (see Figure 6-6). Using 1/4" ID tubing, connect one of the N_2 supply tanks to the fitting labeled N2 Inlet #1. Connect the second N_2 supply tank to the fitting labeled N2 Inlet #2. Install 3/8" hose clamps to secure the 1/4" ID tubing to the barbed fittings on the regulator and the rear of the electronics drawer.

Warning Check for leaks at all connections. ▲

De-activating Built-in Gas Guard

The built-in Gas Guard is turned ON when shipped from the factory. In addition, the Tank Select for the gas guard is specified as Tank 1 when shipped. Refer to Section 3, Configuration, to de-activate the Gas Guard or change the Tank Select from 1 to 2. If the operator does not want to use the Gas Guard, the incubator functions normally by supplying CO_2 (or N_2) through the CO2 Inlet #1 (or the N2 Inlet #1).

Operation of CO_2 or N_2 Gas Guard

With the Gas Guard in operation, the incubator will use the gas supplied through CO2 (or N2) Inlet #1 until the pressure drops below approximately 10 psig. At this time, the Gas Guard automatically switches to the gas supplied through CO2 (or N2) Inlet #2.

In addition, the incubator automatically changes the Tank Sel in Configure mode from 1 to 2 to indicate that the incubator is now using gas supplied through CO2 (or N2) Inlet # 2. If the gas supply to CO2 (or N2) Inlet #1 is replenished, the incubator will continue to operate using the gas supplied through CO2 (or N2) Inlet #2 unless the operator changes the Tank Select from 2 to 1 through the Configuration mode. Refer to Section 3, Configuration.

An audible alarm and two visual alarms occur on the control panel when the gas guard switches from one supply to the other. The audible alarm will sound until the operator presses the Silence key on the control panel. A visual alarm in the Message Center will read Tank 1 Low while the audible alarm is sounding, but will be removed after the operator presses the Silence key.

Operation of CO_2 or N_2 Gas Guard (cont.)

Neither of the audible and visual alarms described above ring back once the Silence key is pressed. However, there is a second visual alarm, Tank Low, that illuminates in red below the Silence key on the control panel when either of the two gas supplies fall below 10 psig (68.95 kPa). The Tank Low remains illuminated as long as the gas guard detects a low pressure on either of the gas supply lines. This message is a reminder for the operator to replace or check for insufficient gas supply to the incubator.

If the gas guard does not detect an adequate gas supply at the CO2 (or N2) Inlet #1 or CO2 (or N2) Inlet #2, a visual and audible alarm will again occur on the control panel. The visual alarm in the Message Center will read Tank 1&2 Low. The audible alarm will continue to ring until the Silence key is pressed. The audible alarm will ring back every 15 minutes after the alarm is silenced, if the Gas Guard continues to detect that both gas supply pressures are below 10 psig (68.95 kPa).

Humidity Readout (190643)

The 3100 Series incubators can be equipped with a humidity sensor to monitor the relative humidity (RH) inside the chamber. The sensor is mounted to the top air duct and provides a signal that is displayed in 1% increments on the control panel. The humidity readout can be displayed continuously or toggles with the temperature readout. In addition, a low alarm limit can be set on the humidity readout which will detect when the humidity pan runs dry. Refer to Section 3, Configuration.

Factors Affecting Humidity Level in Chamber:

- Water level in the humidity pan
- Frequency of door openings
- Humidity pan location; floor, shelf, in duct
- Flooded bottom of chamber
- Air leakage through the gaskets
- Gas sample port capped
- Standard HEPA filter or VOC HEPA2 filter or air flow restrictor plate
- N_2 purge on incubators with O_2 control.
- Humidity levels in O_2 units (Models 3130/3131, 3140/3141) will be reduced, depending on the amount of N_2 required to control the O_2 level in the chamber.

Humidity Readout (190643) continued

The following table lists some typical RH levels at different O_2 and CO_2 percentages.

Table 6-2. Typical RH levels

O2%	CO2%	RH% (±5%)
1%	2.5%	55%
2%	5%	60%
5%	10%	75%
10%	10%	80%
21%	5%	95%

Incubators equipped with a Thermal Conductivity CO_2 sensor rely on a constant level of relative humidity in order to accurately measure and control the CO_2 concentration in the incubator.

The humidity sensor is capable of measuring relative humidity from 10% to 100% with an accuracy of ±5% above 90%. See Section 2, Calibration for details on calibrating the humidity readout.

Cooling Coil

Note For customer convenience, 12 ft. of 3/8" I.D. vinyl tubing with 4 clamps is included in the shipping materials. ▲

The operating (setpoint) temperature range of the incubator with the cooling coil installed is from +5°C above ambient down to +15°C.

The cooling coil incubator incorporates a finned, U-shaped copper pipe installed within the water jacket. This pipe routes chilled water supplied by a laboratory bath. (Be aware that your bath may not be set to restart after a power failure. Read the manufacturer's operating instructions.)

Verify that the supply line pressure does not exceed 20 psig (138 KPa).

When the cooling coil is in use, several factors affect the uniformity inside the incubator chamber: the temperature difference between the operating temperature set point and the bath water temperature; the flow rate of the chilled water, and the on-time percentage of the door heaters.

Cooling Coil (continued)

As determined in carefully controlled laboratory tests, the smaller the difference between the temperature of the bath and the setpoint temperature of the incubator, the better the uniformity. However, decreasing this temperature difference does cause less control of the system because if the bath does not cool the water jacket adequately, the heaters do not cycle and the chamber temperature simply drifts with the ambient temperature of the room.

Tests have shown that as a starting point, operating the bath at 2°C to 3°C below the incubator's operating setpoint temperature, with a cooling water flow rate of 1/2 to 1 GPM (gallons per minute), should result in good control and uniformity.

Caution Because of the efficiency of the cooling coil design, it is possible for condensation to occur on the outside of the incubator's water jacket when operating in certain ambient temperature and relative humidity conditions. The condensation will then saturate the fiberglass insulation between the water jacket and the incubator cabinet. ▲

Warning Clean up any condensation that may leak out onto the floor to prevent a possible slip hazard. ▲

Using psychometric data from the Carrier® Psychometric Chart, curves of maximum allowable RH versus ambient temperature can be plotted for different incubator/bath conditions (see Figure 6-7).

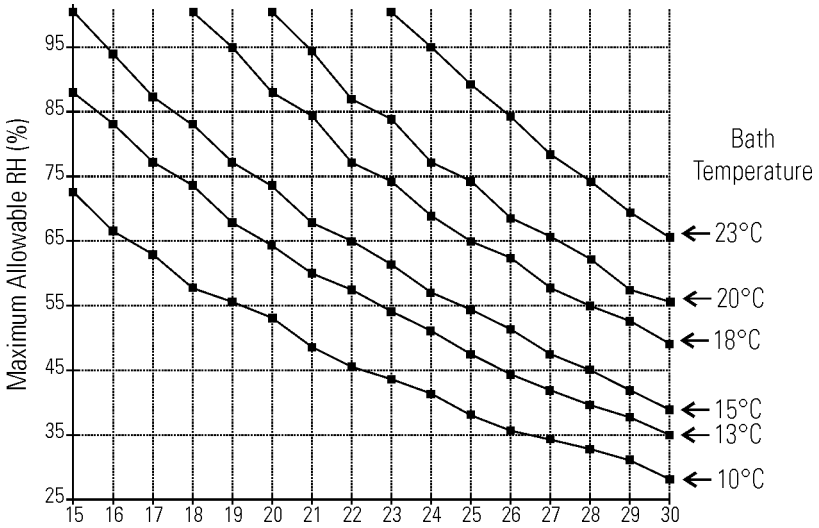

Figure 6-7. RH Limits to Avoid Water Jacket Condensation

For example, if the bath is to be operated at 15°C and the ambient temperature is about 28°C, the RH in the room must be less than 45% to avoid condensation forming between the water jacket and the outside of the cabinet.

Installing Cooling Coil Incubator

Hose barbs are factory installed into the fittings on the back of the cabinet, as shown below. They can be used as the water inlet or outlet to the bath. Locate the vinyl tubing and hose clamps shipped inside the incubator. Cut the tubing in half. The bath can be located up to six feet from the incubator.

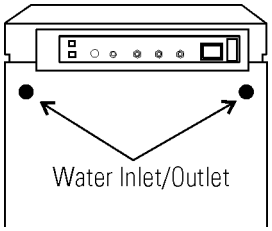

Figure 6-8. Back of Unit

Section 7 Specifications

**Specifications are based on nominal voltages of 115 V or 230 V in ambients of 22°C to 25°C.*

Temperature

Control	±0.1°C
Range*	+5C above ambient to +55C (models 3110, 3111)
	+5C above ambient to +50C (models 3120, 3121)
	+5C above ambient to +45C (models 3130, 3131, 3140, 3141)
Uniformity	±0.2°C @ +37°C
Sensor	Precision thermistor
Tracking Alarm	User programmable high/low

**Cooling coil option extends low end temperature range to 15°C*

Over Temperature Protection

Sensor	Precision thermistor
Controller	Independent circuit
Setability	0.1°C
Range	Temp set point +0.5°C to 60°C
Tracking Alarm	Not user programmable

CO_2/O_2

CO_2/O_2 Control	Better than ±0.1%
CO_2 Range	0-20%
O_2 Range	1-21%
Inlet Pressure	15 PSIG (103.4 kPa), maximum
CO_2 Sensor	T/C or IR
O_2 Sensor	Fuel Cell
Readability	0.1%
Setability	0.1%
Tracking Alarm	User programmable, high/low

Humidity

RH	Ambient to 95% @ +37°C (98.6°F)
Humidity Pan	0.8 gal. (3 liters) standard
Tracking Alarm	User programmable, low only
Optional Display	1% increments

Fittings	
Fill Port	3/8" barbed
Drain Port	3/8" barbed, quick-connect
Access Port	1¼" (3.18 cm) removable neoprene plug
CO_2/N_2 Inlets	1/4" hose barbed

Unit Heat Load (typical @ +37°C)

115V/230V	344 BTUH (100 Watt)

HEPA Filter

Federal Standard 209E, Class 100 - maximum allowable number of particles 0.5 microns and larger per cubic foot of air *

	full recovery within 5 minutes of door opening
Replacement Reminder	User programmable
Optional Filtration System	Volatile Organic Chemicals (VOC)

**follow manufacturer's recommendations for regular filter replacement*

Shelves

Dimensions	18.5" x 18.5" (47.0 cm x 47.0 cm)
Construction	Stainless steel, perforated, electropolished
Surface area	2.4 sq. ft. (0.22 sq. m) per shelf
Max. per Chamber	38.4 sq.ft. (3.6 sq. m)
Loading	35 lbs (16 kg) slide in and out, 50 lbs (23 kg) stationary
Standard #	3 (shipped with unit)
Maximum #	16

Construction

Water Jacket Volume	11.7 gal. (44.3 liters) typical
	13.0 gal. (49.2 liters) maximum
Interior Volume	6.5 cu. ft. (184.1 liters)
Interior	Type 304, mirror finish, stainless steel
Exterior	18 gauge, cold rolled steel, powder coated
Outer Door Gasket	Four-sided, molded magnetic vinyl
Inner Door Gasket	Removable, cleanable, feather-edged, silicone

Electrical

115V Models	115 VAC, 50/60 Hz, 1 PH, 3.6 FLA
230V Models	230 VAC, 50/60 Hz, I PH, 2.0 FLA
Circuit Breaker/Power Switch	6 Amp/2 Pole
Convenience Receptacle	75 Watts max. (one per chamber)

Electrical (continued)

Remote Alarm Contacts	Power interruption, over temperature, deviation of temp., CO_2, O_2, and RH, customer connections through jack on back of unit. 30 V, 1 A max.
Optional Data Outputs	RS-485, 0-1 V, 0-5 V, 4-20 mA

Dimensions

Interior	21.3″ W x 26.8″ H x 20.0″ F-B, (54.1 cm x 68.1 cm x 50.8 cm)
Exterior	26.3″ W x 39.5″ H x 25.0″ F-B, (66.8 cm x 100.3 cm x 63.5 cm)

Weight (per unit)

Net	265 lb. (120.2 kg) before filling water jacket
Net Operational	365 lb. (165.6 kg) after filling water jacket
Shipping	324 lb. (147.0 kg)

Certifications

Thermo Fisher Scientific declares that the applicable CE marked models meet the provisions of the following EC directives.

204/108/EC Electromagnetic Compatibility Directive

2006/95/EC Low Voltage Directive

2011/65/EU RoHS Directive

CE Declarations are available upon request from the factory.

Safety Specifications

Indoor Use Only

Altitude	Up to 2000 meters
Temperature	5°C to 40°C
Humidity	Maximum 80% RH for temperatures up to 31°C, decreasing linearly to 50% RH at 40°C, non-condensing
Mains Supply Fluctuations	Not to exceed ±10% of the nominal voltage

Installation Category 2[1]

Pollution Degree 2[2]

Class of Equipment 1

1 Installation category (overvoltage category) defines the level of transient overvoltage which the instrument is designed to withstand safely. It depends on the nature of the electricity supply and its overvoltage protection means. For example, in CAT II which is the category used for instruments in installations supplied from a supply comparable to public mains such as hospital and research laboratories and most industrial laboratories, the expected transient overvoltage is 2500 V for a 230 V supply and 1500 V for a 120 V supply.

2 Pollution Degree describes the amount of conductive pollution present in the operating environment. Pollution Degree 2 assumes that normally only non-conductive pollution such as dust occurs with the exception of occasional conductivity caused by condensation.

Section 8 Spare Parts

All Models

Part #	Description
360171	Liquid Level Switch
191534	Feather Gasket
113002	5/16-18 Glide Foot
132046	115/230 V Dual Heater
132049	Face Heater 40 W, 24 VAC
1900203	Heated Inner Door
190619	Left Inner Door Hinge
190618	Right Inner Door Hinge
700013	0.500" Flanged Nylon Bearing
990026	Door Gasket w/ Magnet
290184	Temp Probe 2252 Ohm
192057	Micro Board (for Release 7 units)
400218	12 VDC Single Output Power Supply (Release 7 units)
190609	Display Board Assembly
230153	6 A Circuit Breaker/Switch
460157	Line Filter/Power Inlet
420096	130VA Transformer, 12/24 V
230159	3.5 Amp Fuse - Microboard
230158	2.5 Amp Fuse - Microboard
250087	Solenoid Valve Kit w/assorted fittings
1900071	Blower Motor Replacement Kit
100113	Blower Wheel 3.5 x 1.5 CCW
190846	Blower Scroll Assembly
103072	Blower Plate Gasket
1900601	Service Kit (P/N 290090 T/C type CO2 sensor assembly)
103074	CO_2 Sensor Plate Gasket
130097	#6 Silicone Stopper w/ 3/8" Hole
180001	Polypropylene Funnel
117044	Fill Port Cap
2270107	Micro Board/Power Supply Kit (to replace Micro Board P/N 191634, Release 5 & 6 units)

All Models (continued)

Part #	Description
770001	Bacterial Air Filter (CO_2 line, gas guard, sample, access port)
760210	10 Bacterial Air Filters (770001)
760175	HEPA Filter
760209	HEPA Value Pack of 4 Filters (760175)
760200	HEPA2 VOC Filter
760199	HEPA2 VOC Filter Accessory Kit (760200 HEPA2, 117036 silicone plug, 101018 O-ring)
1900067	Filter Replacement Kit ([2] 770001 filter and 760175 HEPA)
1900094	HEPA2 VOC Filter Replacement Kit (760200 HEPA2, 190985 access port filter assembly, 770001 filter)
1900123	Air Flow Restrictor Plate
190651	Decontamination Kit
190566	Inner Door Heater Cable
400201	40 W Switcher Kit (replaces triple output power supply P/N 400119, for units prior to Release 7)
1900548	Exterior Door Assembly SRO

Spare Parts - 115 V (3110, 3120, 3130, 3140)

460024	115 V Convenience Outlet
230135	1.0 A Fuse for Convenience Outlet
430108	Line Cord (North America 125V/15A)

Spare Parts - 230 V (3111, 3121, 3131, 3141)

420097	43VA Transformer
460138	Power Outlet, Snap-In Receptacle
230120	1/2 AMP Fuse for 230 V outlet
430109	Line Cord (Continental Europe)
430111	Line Cord (Denmark)
430112	Line Cord (Italy)
430113	Line Cord (Switzerland)
430114	Line Cord (United Kingdom)
430115	Line Cord (India)
430116	Line Cord (Israel)
430118	Line Cord (Australia)
430367	Line Cord (China)

Spare Parts - IR or O_2 (3120/3121, 3130/3131, 3140/3141)

190885	IR Sensor
191646	O_2 Circuit Board
250119	AC Solenoid
770001	Bacterial Air Filter (CO2 line, gas guard, sample and access port)
250118	Valve, Sol, O_2, 12 VDC, 4 W
290083	O_2 Sensor Fuel Cell
190661	IR Sensor Filter
110065	Sample Port Cap

Spare Parts - Gas Guard (190640/190642)

250121	Solenoid Valve, 3-way, 12 VDC
360213	Pressure Switch

Spare Parts - Humidity Readout (190643)

290154	RH Sensor Assembly, 1 ft.

Spare Parts - Data Output Options

190512	Analog Output Board 4-20 mA
190543	Analog Output Board 0-5 V
190544	Analog Output Board 0-1 V
73041	22 Gauge, 3 Conductor, Shielded Cable
190523	RS485 Output Kit

Field Installation Kits for qualified service personnel

Gas Guard Kit, CO2 & N2	1900061
Humidity Sensor Kit	1900062
RS-485 Output Kit	1900043
Analog Output* Kit, 4 - 20 mA	1900044
Analog Output* Kit, 0 - 5Vdc	1900045
Analog Output* Kit, 0 - 1Vdc	1900046

** select only one type of optional analog output*

SYM	STK #	DESCRIPTION	SYM	STK #	DESCRIPTION	SYM	STK #	DESCRIPTION
1	22049	6-32 X 3/8 PHP SCREW	26	270107	FERRITE, SPLIT, 1/2 OD CABLE	48	730044	SHOULDER WASHER, .385
2	22052	8-32 X 3/8 PHP SCREW	27	270184	FERRITE 40 POS. RIBBON CABLE	49	190523	RS-485 "OPTION"
3	22115	6-32 X 1/4 PHP SCREW	28	270139	BERYLLIUM COPPER FINGERS, 6"	50	230120	FUSE, 0.5A , 5 X 20MM (EXP)
4	590032	4-40 X 1/4 PHP SEM SCREW	29	340030	LIQUID TIGHT CONNECTOR	51	1900089	HARNESS, GAS GUARD
5	23002	8-32 LK/WASHER HEX NUT	30	370472	CAP, 2 POS. MINI MATE-N-LOK	52	190641	GAS GUARD MANIFOLD ASSEMBLY
6	23006	4-40 LK/WASHER HEX NUT	31	400218	SWITCHER 40W 12V OUTPUT	53	190885	IR CO2 SYSTEM (SENSOR & BOARD)
7	515084	1/4 x 3/8 LG SPACER	32	420096	130VA XFMR, INT'L 12/24V	54	191646	WIRED O2 INTERFACE BOARD
8	23030	6 SS INT TOOTH LK/WASHER	33	420097	43VA XFMR, INT'L 115/230V	55	246008	1/16 ID TYGON TUBING
9	23059	8 SS EXT TOOTH LK/WASHER	34	440022	PUSH MOUNT TIE & ANCHOR	56	250118	O2 SOLENOID VALVE,12VDC
10	30014	1/2 IN SNAP BUSHING	35	460024	SNAP-IN RECEPT., 120V (DOM)	57	350006	1/8 HOSE X 10-32 MUNF ADAPTER
11	30087	1-1/4 SNAP BUSHING	36	460138	SNAP-IN RECEPT, 230V (EXP)	58	380220	1/8 MPT X 1/4 HOSE ADAPTER
12	59007	4-40 X 3/8 PHP SCREW	37	460212	PWR ENTRY/RFI LINE FILTER	59	840027	1/16 TUBE X 10-32 NYLON
13	127051	SPACER, M/F 4-40THD,.375	38	600034	SNAPPER HOSE CLAMP, .375	60	840035	1/8 MPT X 3/16 HOSE ADAPTER
14	180172	CONTROL PANEL BEZEL	39	600063	SNAPPER HOSE CLAMP, .312	61	1900052	HARNESS-O2 SENSOR & BOARD
15	190609	CONTROL PANEL, DISPLAY	40	770001	DISPOSABLE FILTER, 99.97	62	190715	HARNESS- I/R SENSOR & BOARD
15A	1900609	CONTROL PANEL, DISPLAY (5060/62)	41	840045	1/4 HOSE X 10-32 ADAPTER	63	1900606	COMPONENT DRAWER
16	190615	DISPLAY BOARD MOUNT	42	840020	BULHEAD FTG, BRASS 1/4	64	190605	CONTROL HOUSING WRAP
17	190994	OUTLET MOUNT, 3110 (DOM)	43	950013	VINYL TUBING 1/4 ID	65	190605	CONTROL HOUSING BACK
18	192057	MICRO BOARD	44	1900050	HARNESS,3110 II DRAWER	66	220477	GROUND SYMBOL LABEL
19	194021	RIBBON CABLE 34 POS.	45	1900054	SOLENOID MOUNT	67	125035	5/16 x 3/8 NYLON SPACER
20	210085	CORDSET W/FEMALE RECEPTACLE	46	190571	ANALOG BRD, 4-20MA "OPTION" or			
21	230105	FUSEBLOCK 5 X 20MM	--	190572	ANALOG BRD, 0-5V "OPTION" or			
22	230135	FUSE, 1 A TD, 5 X 20MM (DOM)	--	190573	ANALOG BRD, 0-1V "OPTION"			
23	230153	6A DPDT CKT BKR/SWITCH	47	34014	PE HOLE PLUG, BLACK			
24	950013	VINYL TUBING, 1/4 ID						
25	250139	CO2 SOLENOID VALVE, 12 VDC						

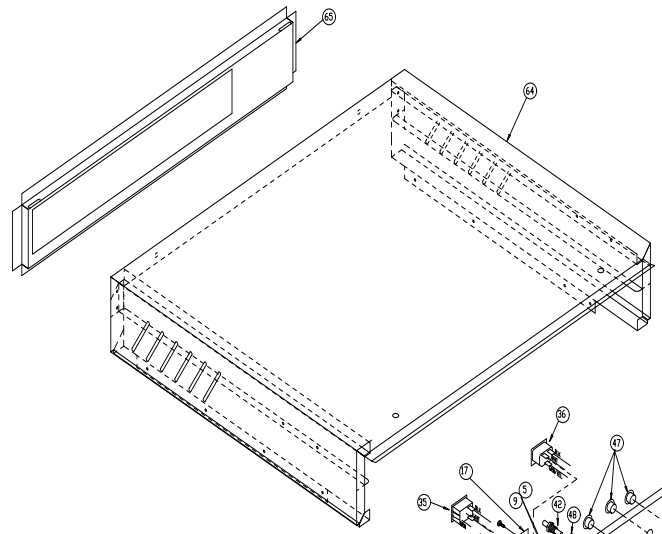

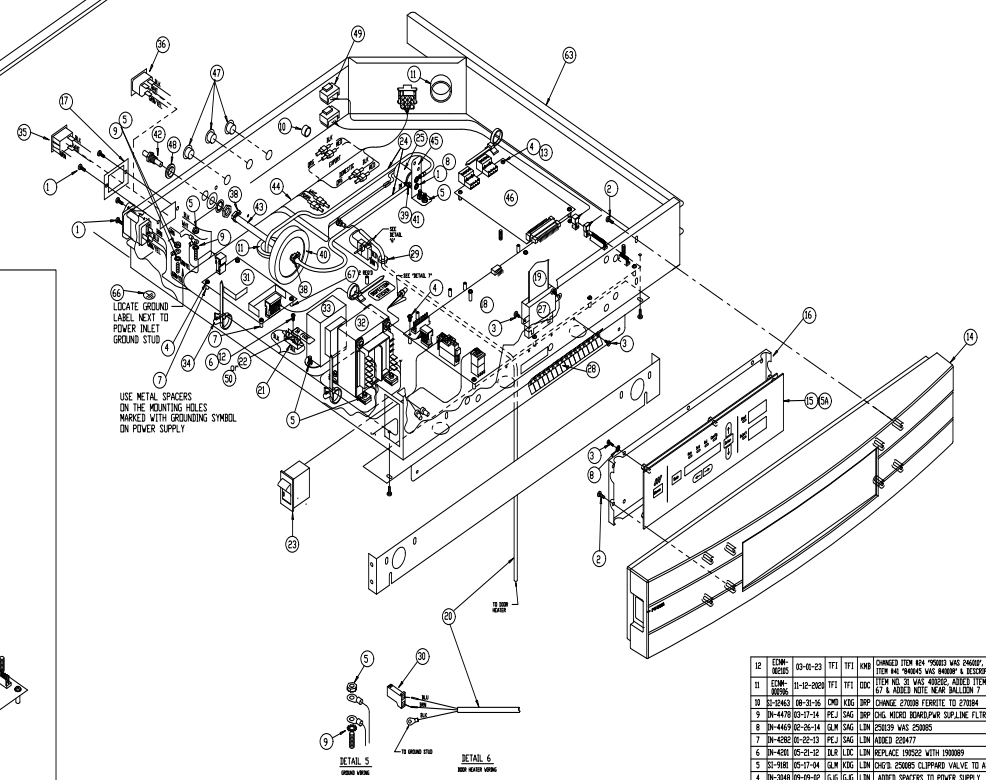

I/R ASSEMBLY (3120, 3121, 3140, 3141) ,O2 ASSEMBLY (3140, 3141)
AND "OPTIONAL" GAS GUARD ASSEMBLY DETAIL

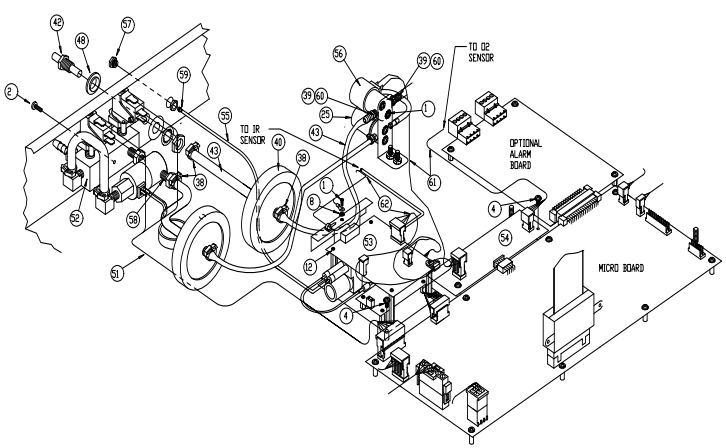

REV	ECN NO.	DATE	BY	CAD	APPD	DESCRIPTION OF REVISION
12	ECNM-082105	03-01-23	TFI	TFI	KMB	CHANGED ITEM #24 "950013 WAS 246001", ITEM #41 "840045 WAS 840008" & DESCRIPTIONS
11	ECNM-008986	11-12-2020	TFI	TFI	ODC	ITEM NO. 31 WAS 400202, ADDED ITEM NO. 67 & ADDED NOTE NEAR BALLOON 7
10	SI-12463	08-31-16	CMD	KDG	DRP	CHANGE 270108 FERRITE TO 270184
9	IN-4478	03-17-14	PEJ	SAG	DRP	CHG. MICRO BOARD,PWR SUP,LINE FLTR
8	IN-4469	02-26-14	GLM	SAG	LIN	250139 WAS 250085
7	IN-4282	01-22-13	PEJ	SAG	LIN	ADDED 220477
6	IN-4201	05-21-12	DLR	LDC	LIN	REPLACE 190522 WITH 1900089
5	SI-9181	05-17-04	GLM	KDG	LIN	CHG'D. 250085 CLIPPARD VALVE TO ASCO
4	IN-3048	09-09-02	GJG	GJG	LIN	ADDED SPACERS TO POWER SUPPLY
3	IN-2959	02-27-02	LIN	KDG	LIN	REF. 1900609 CONTROL PANEL DISPLAY
2	IN-2994	10-25-01	WCW	PDK	LIN	CHG. 22130 & 23029 TO 590032

THIS DOCUMENT CONTAINS PROPRIETARY INFORMATION AND SUCH INFORMATION IS NOT TO BE DISCLOSED TO OTHERS FOR ANY PURPOSE NOR USED FOR MANUFACTURING PURPOSES WITHOUT WRITTEN PERMISSION FROM THERMO FISHER SCIENTIFIC

Thermo Fisher SCIENTIFIC
BOX 649, MARIETTA, OHIO 45750

MODEL/PART NAME: 3110 SERIES WATER JACKET INCUBATOR
DWG TITLE: EXPLODED VIEW SERVICE DRAWINGS
DWN: GJG | CAD: GJG | APPD: DNF | DATE: 07-14-00 | SCALE: 1/4
MATERIAL: NA
PAINT COLOR: NA
TOLERANCE UNLESS OTHERWISE SPECIFIED
ANGLES: DECIMAL: .XX±± .XXX±±
DRAWING NUMBER: 3110-200-1
SIZE: D

SYM	STK #	DESCRIPTION	SYM	STK #	DESCRIPTION	SYM	STK #	DESCRIPTION
1	22049	6-32 X 3/8 PHP SCREW	26	270107	FERRITE, SPLIT, 1/2 OD CABLE	48	730044	SHOULDER WASHER, .385
2	22052	8-32 X 3/8 PHP SCREW	27	270184	FERRITE 40 POS. RIBBON CABLE	49	190523	RS-485 "OPTION"
3	22115	6-32 X 1/4 PHP SCREW	28	270139	BERYLLIUM COPPER FINGERS, 6"	50	230120	FUSE, 0.5A , 5 X 20MM (EXP)
4	590032	4-40 X 1/4 PHP SEM SCREW	29	340030	LIQUID TIGHT CONNECTOR	51	1900089	HARNESS, GAS GUARD
5	23002	8-32 LK/WASHER HEX NUT	30	370472	CAP, 2 POS. MINI MATE-N-LOK	52	190641	GAS GUARD MANIFOLD ASSEMBLY
6	23006	4-40 LK/WASHER HEX NUT	31	400218	SWITCHER 40W 12V OUTPUT	53	190885	IR CO2 SYSTEM (SENSOR & BOARD)
7	515084	1/4 x 3/8 LG SPACER	32	420096	130VA XFMR, INT'L 12/24V	54	191646	WIRED O2 INTERFACE BOARD
8	23030	6 SS INT TOOTH LK/WASHER	33	420097	43VA XFMR, INT'L 115/230V	55	246008	1/16 ID TYGON TUBING
9	23059	8 SS EXT TOOTH LK/WASHER	34	440022	PUSH MOUNT TIE & ANCHOR	56	250118	O2 SOLENOID VALVE,12VDC
10	30014	1/2 IN SNAP BUSHING	35	460024	SNAP-IN RECEPT., 120V (DOM)	57	350006	1/8 HOSE X 10-32 MUN,F ADAPTER
11	30087	1-1/4 SNAP BUSHING	36	460138	SNAP-IN RECEPT, 230V (EXP)	58	380220	1/8 MPT X 1/4 HOSE ADAPTER
12	59007	4-40 X 3/8 PHP SCREW	37	460212	PWR ENTRY/RFI LINE FILTER	59	840027	1/16 TUBE X 10-32 NYLON
13	127051	SPACER, M/F 4-40THD,.375	38	600034	SNAPPER HOSE CLAMP, .375	60	840035	1/8 MPT X 3/16 HOSE ADAPTER
14	180172	CONTROL PANEL BEZEL	39	600063	SNAPPER HOSE CLAMP, .312	61	1900052	HARNESS-O2 SENSOR & BOARD
15	190609	CONTROL PANEL, DISPLAY	40	770001	DISPOSABLE FILTER, 99.97	62	190715	HARNESS- I/R SENSOR & BOARD
15A	1900609	CONTROL PANEL, DISPLAY (5060/62)	41	840045	1/4 HOSE X 10-32 ADAPTER	63	1900606	COMPONENT DRAWER
16	190615	DISPLAY BOARD MOUNT	42	840020	BULHEAD FTG, BRASS 1/4	64	190605	CONTROL HOUSING WRAP
17	190994	OUTLET MOUNT, 3110 (DOM)	43	950013	VINYL TUBING 1/4 ID	65	190605	CONTROL HOUSING BACK
18	192057	MICRO BOARD	44	1900050	HARNESS,3110 II DRAWER	66	220477	GROUND SYMBOL LABEL
19	194021	RIBBON CABLE 34 POS.	45	1900054	SOLENOID MOUNT	67	125035	5/16 x 3/8 NYLON SPACER
20	210085	CORDSET W/FEMALE RECEPTACLE	46	190571	ANALOG BRD, 4-20MA "OPTION" or			
21	230105	FUSEBLOCK 5 X 20MM	--	190572	ANALOG BRD, 0-5V "OPTION" or			
22	230135	FUSE, 1 A TD, 5 X 20MM (DOM)	--	190573	ANALOG BRD, 0-1V "OPTION"			
23	230153	6A DPDT CKT BKR/SWITCH	47	34014	PE HOLE PLUG, BLACK			
24	950013	VINYL TUBING, 1/4 ID						
25	250139	CO2 SOLENOID VALVE, 12 VDC						

I/R ASSEMBLY (3120, 3121, 3140, 3141) ,O2 ASSEMBLY (3140, 3141)
AND "OPTIONAL" GAS GUARD ASSEMBLY DETAIL

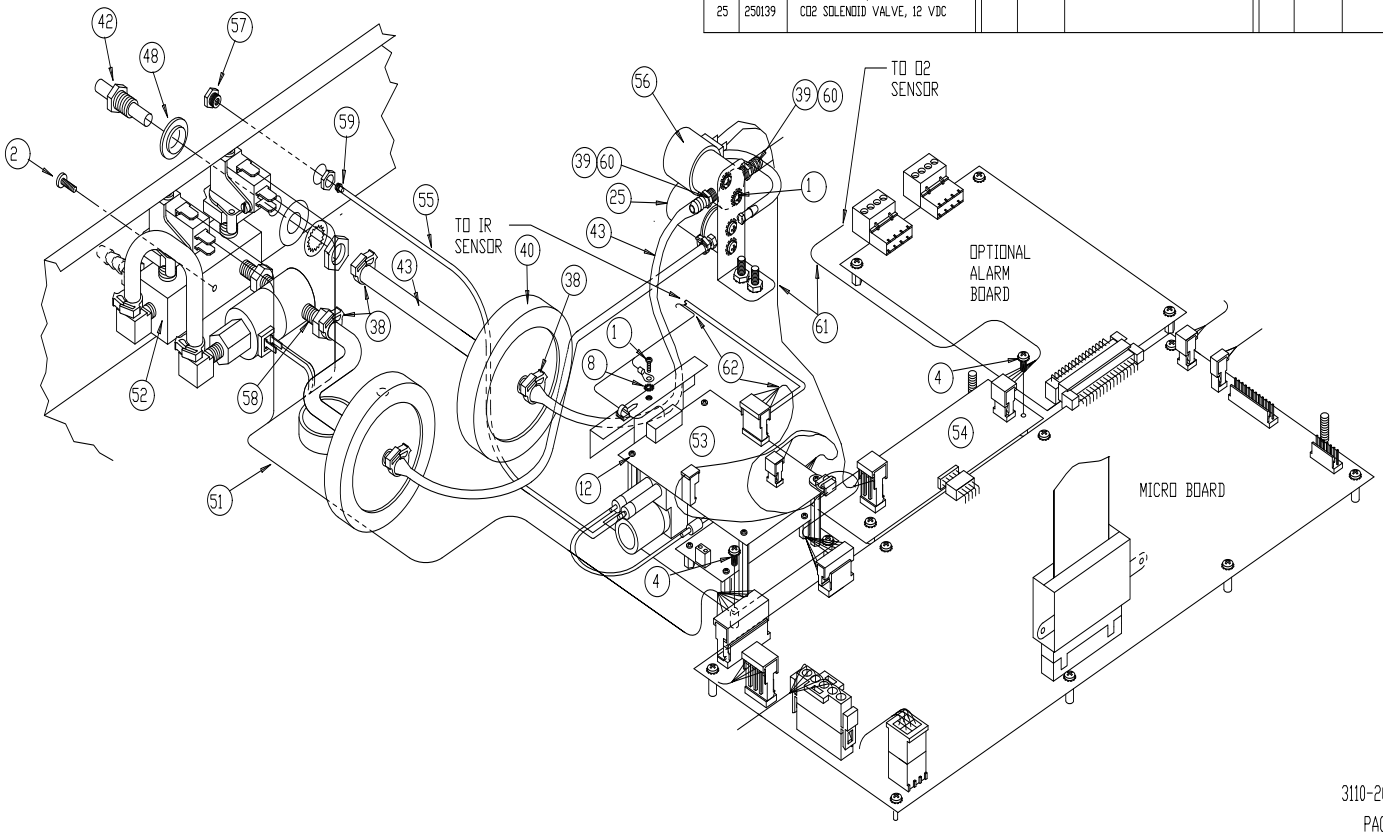

3110-200-1-D REV12
PAGE 2 OF 2

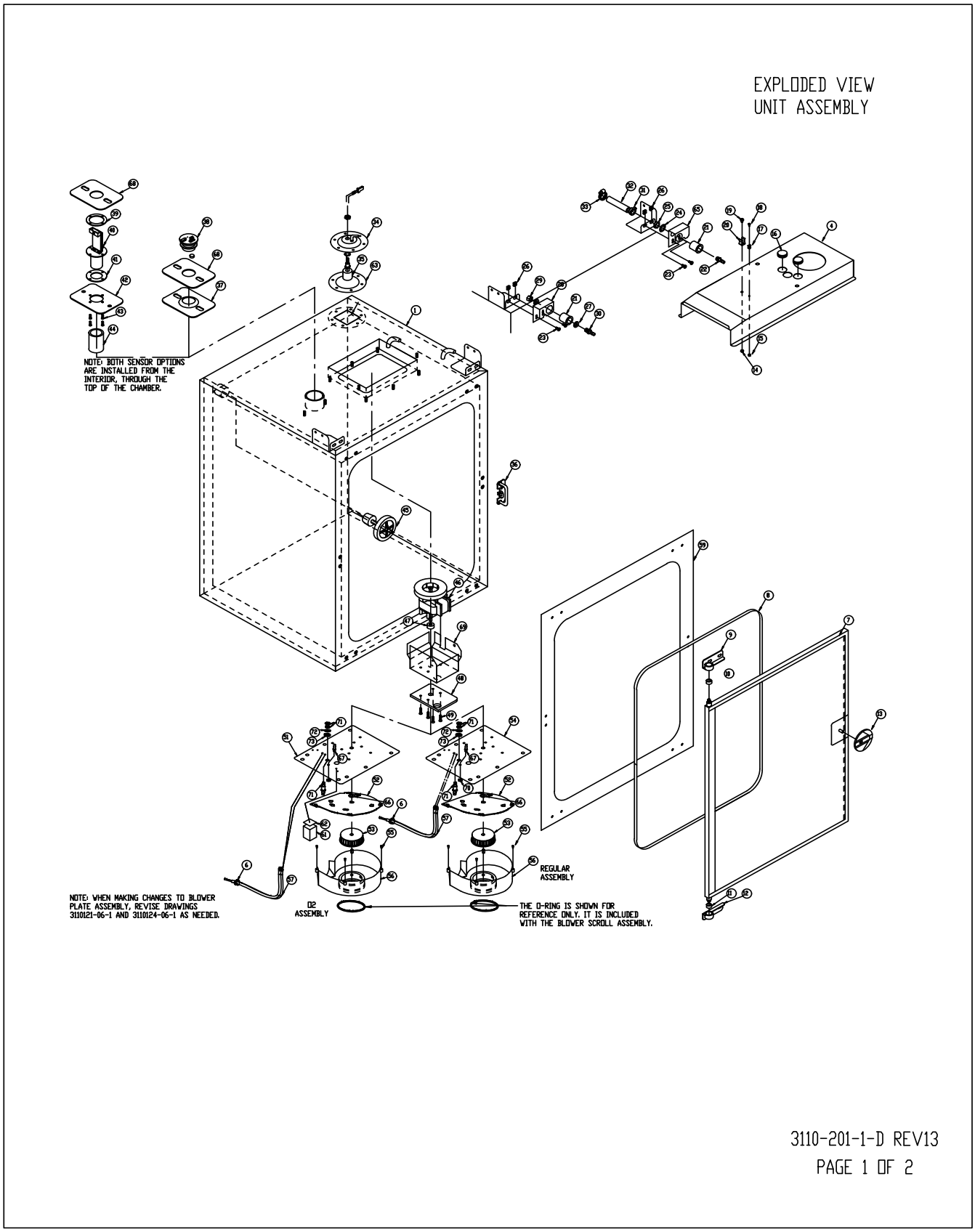
EXPLODED VIEW
UNIT ASSEMBLY
NOTE: BOTH SENSOR OPTIONS ARE INSTALLED FROM THE INTERIOR, THROUGH THE TOP OF THE CHAMBER.
REGULAR ASSEMBLY
NOTE: WHEN MAKING CHANGES TO BLOWER PLATE ASSEMBLY, REVISE DRAWINGS 3110121-06-1 AND 3110124-06-1 AS NEEDED.
D2 ASSEMBLY
THE O-RING IS SHOWN FOR REFERENCE ONLY. IT IS INCLUDED WITH THE BLOWER SCROLL ASSEMBLY.
3110-201-1-D REV13
PAGE 1 OF 2

SYM	STK #	DESCRIPTION	SYM	STK #	DESCRIPTION
1	1900600	WATER JACKET CHAMBER	39	190712	IR MOUNTING RING
2	190723	INTERIOR DUCT SHEETS	40	190708	"DCS" IR SENSOR
3	190664	SHELF CHANNELS	41	103083	IR SENSOR GASKET
4	1900056	TOP DUCT(1900057 COPPER)	42	190711	IR MOUNTING PLATE
5	224175	SHELF	43	22130	4-40 X 1/4 SS SCREW
6	114021	.250" ID SILICONE GROMMET	44	190708	IR SENSOR FILTER (PART OF ITEM 40)
7	1900203	INNER GLASS DOOR	45	190985	FILTERED STOPPER ASSEMBLY
8	191534	INNER DOOR GASKET	46	156126	BLOWER MOTOR
9	190618	TOP INNER DOOR HINGE	47	730069	MOTOR SHAFT SEAL
10	700013	TOP INNER DOOR HINGE BUSHING	48	190655	MOTOR SPACER PLATE
11	700046	BOTTOM INNER DOOR HINGE BUSHING	49	590023	8-32 X 3/4 SS SCREWS
12	190619	BOTTOM INNER DOOR HINGE	50		
13	180210	INNER DOOR KNOB	51	1900055	O2 BLOWER PLATE ASSY
14	23010	8-32 SS NUT	52	1900124	SCROLL PLATE
15	23005	4-40 SS NUT	53	100113	BLOWER WHEEL "D" SHAFT
16	114022	15/16 BLIND GROMMET	54	1900053	STANDARD BLOWER PLATE
17	111022	1/4" PROBE CLIP	55	22134	6-32 X 1/2 "FILISTER" HEAD SCREW
18	22130	4-40 X 1/4 SS SCREW	56	190893	BLOWER SCROLL ASSEMBLY
19	22051	8-32 X 1/4 SS SCREW	57	290184	TEMPERATURE PROBE
20	111007	13/32 RH PROBE CLIP	58	760175	HEPA FILTER
21	190294	FILL PORT ACCESS	59	180174	PVC FACE FRAME
22	840043	PLASTIC HOSE BARB	60	237016	HUMIDITY PAN
23	22052	8-32 X 3/8 SS SCREW	61	1900058	BRASS O2 BLOCK
24	290128	1/2" LOCK WASHER	62	100064	BRASS BLOCK SEAL
25	840043	NUT (PART OF #22)	63	103032	FLOAT SWITCH GASKET
26	610055	8-32 CLIP NUT	64	23024	3/8 FLAT WASHER
27	730060	SEAL WASHER	65	190675	RIGHT MOUNT
28	190675	LEFT MOUNT	66	730068	TEFLON WASHER
29	840035	3/16 ADAPTER	67	840045	1/4 HOSE X 10-32 ADAPTER
30	840065	1/4 HOSE BARB	68	103074	SENSOR PLATE SEAL
31	600065	SNAPPER CLAMP	69	1900249	MOTOR SHIELD & GUARD
32	246011	3/8 VINYL TUBING	70	23007	#10-32 SS HEX NUT
33	600055	SS HOSE CLAMP	71	840020	.250 BULKHEAD FITTING
34	190306	FLOAT SWITCH MOUNT	72	730017	3/8 BLACK FIBER WASHER
35	360171	FLOAT SWITCH	73	730031	NEOPRENE WASHER
36	190634	INNER DOOR LACTH			
37	190649	TC SENSOR PLATE			
38	290090	TC SENSOR			

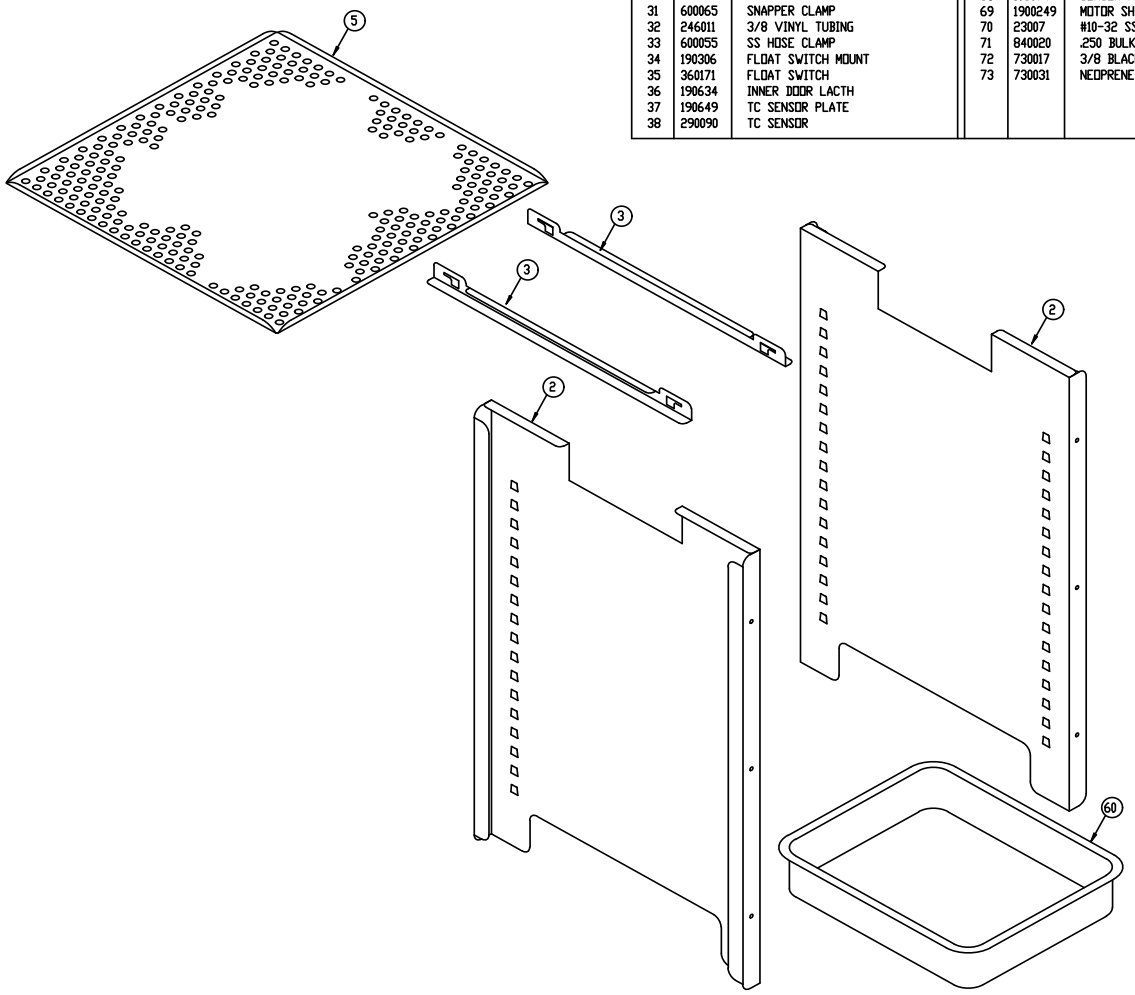

EXPLODED VIEW UNIT ASSEMBLY

3110-201-1-D REV13
PAGE 2 OF 2

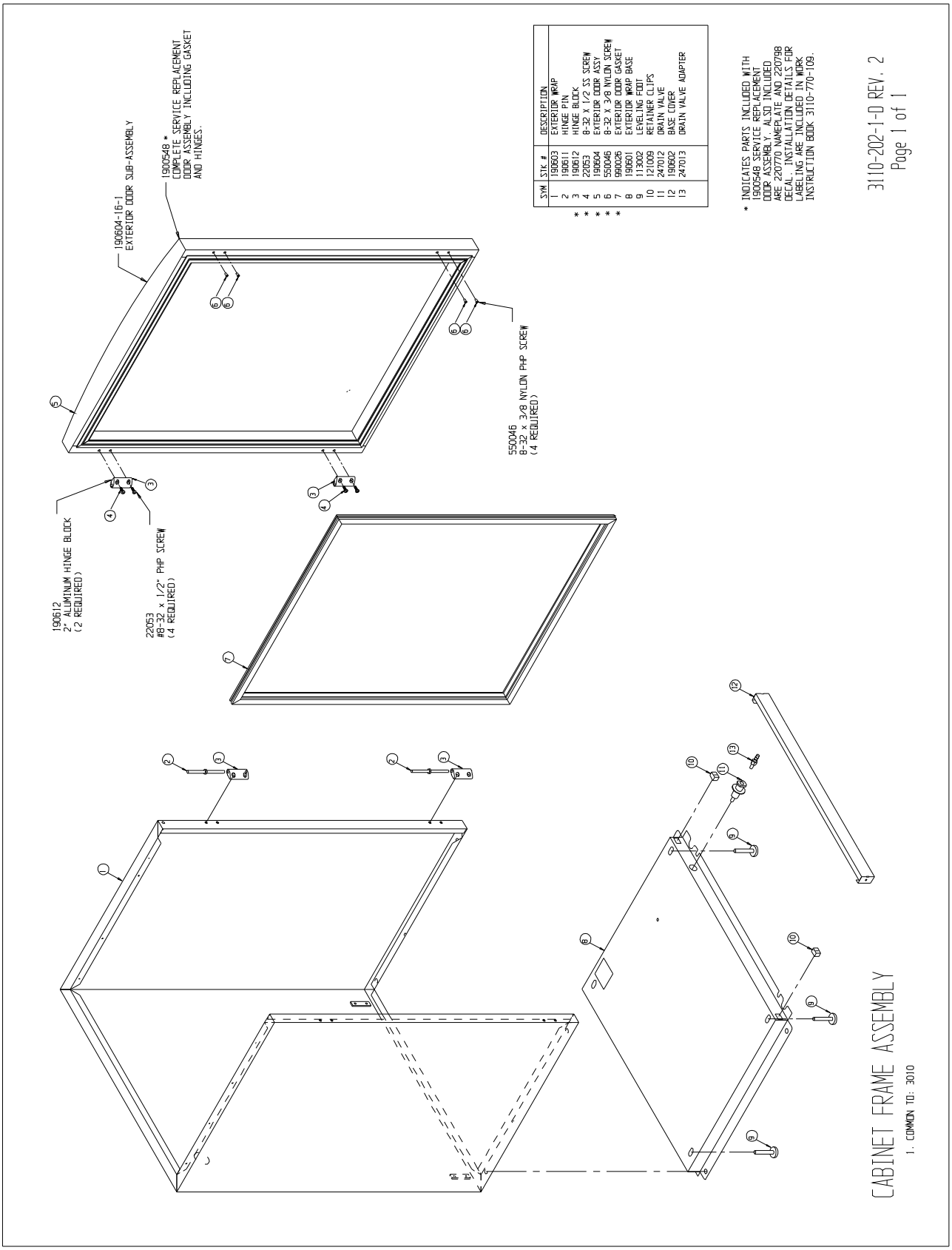
190604-16-1
EXTERIOR DOOR SUB-ASSEMBLY
1900548 *
COMPLETE SERVICE REPLACEMENT
DOOR ASSEMBLY INCLUDING GASKET
AND HINGES.
550046
8-32 x 3/8 NYLON PHP SCREW
(4 REQUIRED)
190612
2" ALUMINUM HINGE BLOCK
(2 REQUIRED)
22053
#8-32 x 1/2" PHP SCREW
(4 REQUIRED)
SYM | STK # | DESCRIPTION
1 | 190603 | EXTERIOR WRAP
2 | 190611 | HINGE PIN
3 | 190612 | HINGE BLOCK
* * 4 | 22053 | 8-32 X 1/2 SS SCREW
* * 5 | 190604 | EXTERIOR DOOR ASSY
* * 6 | 550046 | 8-32 X 3/8 NYLON SCREW
* 7 | 990026 | EXTERIOR DOOR GASKET
8 | 190601 | EXTERIOR WRAP BASE
9 | 113002 | LEVELING FOOT
10 | 121009 | RETAINER CLIPS
11 | 247012 | DRAIN VALVE
12 | 190602 | BASE COVER
13 | 247013 | DRAIN VALVE ADAPTER
* INDICATES PARTS INCLUDED WITH
1900548 SERVICE REPLACEMENT
DOOR ASSEMBLY. ALSO INCLUDED
ARE 220770 NAMEPLATE AND 220798
DECAL. INSTALLATION DETAILS FOR
LABELING ARE INCLUDED IN WORK
INSTRUCTION BOOK 3110-770-109.
3110-202-1-D REV. 2
Page 1 of 1
CABINET FRAME ASSEMBLY
1. COMMON TO: 3010

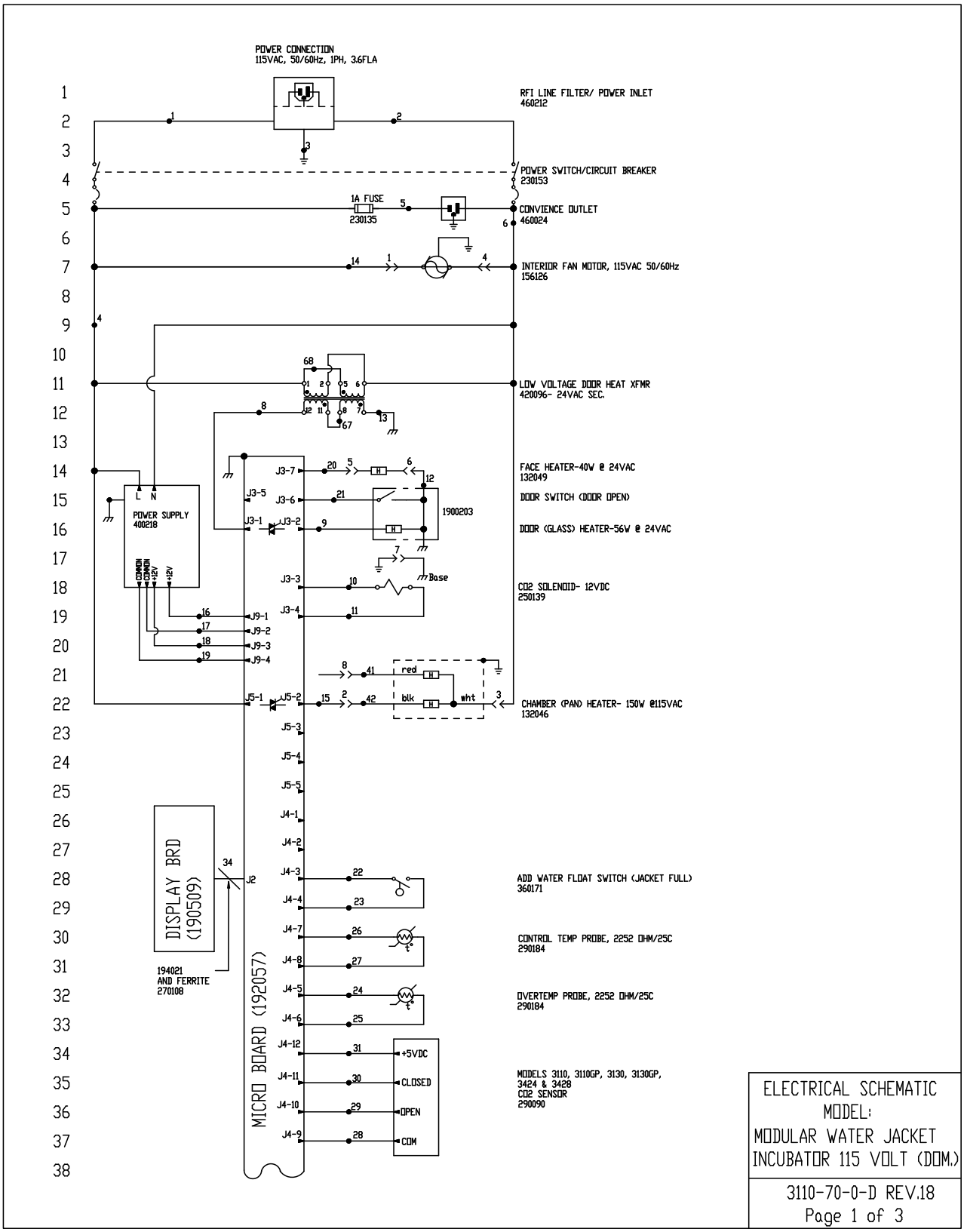
POWER CONNECTION
115VAC, 50/60Hz, 1PH, 3.6FLA
RFI LINE FILTER/ POWER INLET
460212
POWER SWITCH/CIRCUIT BREAKER
230153
1A FUSE
230135
CONVIENCE OUTLET
460024
INTERIOR FAN MOTOR, 115VAC 50/60Hz
156126
LOW VOLTAGE DOOR HEAT XFMR
420096- 24VAC SEC.
FACE HEATER-40W @ 24VAC
132049
DOOR SWITCH (DOOR OPEN)
1900203
DOOR (GLASS) HEATER-56W @ 24VAC
POWER SUPPLY
400218
CO2 SOLENOID- 12VDC
250139
CHAMBER (PAN) HEATER- 150W @115VAC
132046
DISPLAY BRD
(190509)
194021
AND FERRITE
270108
MICRO BOARD (192057)
ADD WATER FLOAT SWITCH (JACKET FULL)
360171
CONTROL TEMP PROBE, 2252 OHM/25C
290184
OVERTEMP PROBE, 2252 OHM/25C
290184
MODELS 3110, 3110GP, 3130, 3130GP,
3424 & 3428
CO2 SENSOR
290090
+5VDC
CLOSED
OPEN
COM
ELECTRICAL SCHEMATIC
MODEL:
MODULAR WATER JACKET
INCUBATOR 115 VOLT (DOM.)
3110-70-0-D REV.18
Page 1 of 3

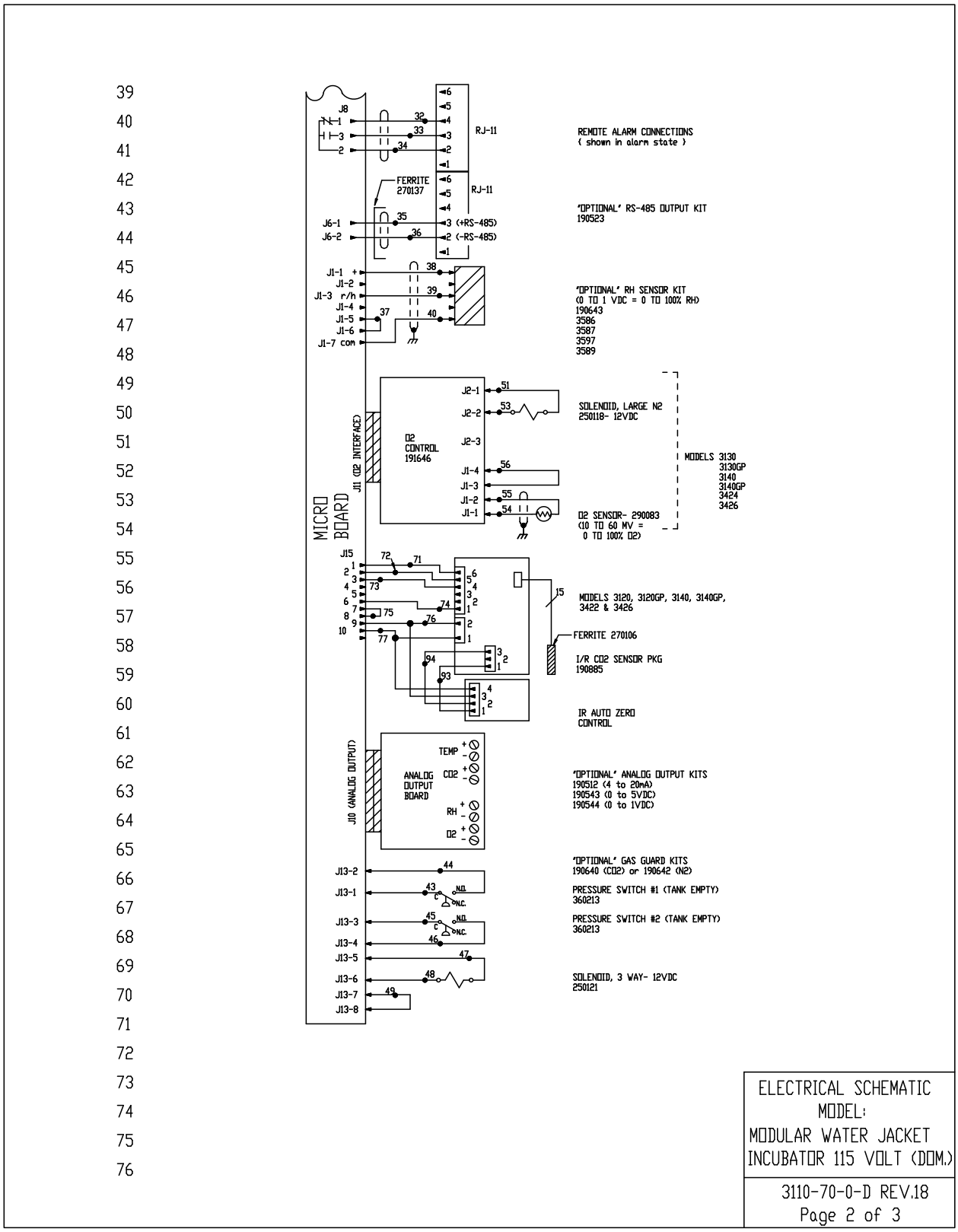
MICRO BOARD
J8
RJ-11
REMOTE ALARM CONNECTIONS
(shown in alarm state)
FERRITE 270137
RJ-11
J6-1
J6-2
(+RS-485)
(-RS-485)
"OPTIONAL" RS-485 OUTPUT KIT
190523
J1-1 +
J1-2
J1-3 r/h
J1-4
J1-5
J1-6
J1-7 com
"OPTIONAL" RH SENSOR KIT
(0 TO 1 VDC = 0 TO 100% RH)
190643
3586
3587
3597
3589
J11 (O2 INTERFACE)
O2 CONTROL 191646
J2-1
J2-2
J2-3
J1-4
J1-3
J1-2
J1-1
SOLENOID, LARGE N2
250118- 12VDC
O2 SENSOR- 290083
(10 TO 60 MV =
0 TO 100% O2)
MODELS 3130
3130GP
3140
3140GP
3424
3426
J15
MODELS 3120, 3120GP, 3140, 3140GP,
3422 & 3426
FERRITE 270106
I/R CO2 SENSOR PKG
190885
IR AUTO ZERO
CONTROL
J10 (ANALOG OUTPUT)
ANALOG OUTPUT BOARD
TEMP
CO2
RH
O2
"OPTIONAL" ANALOG OUTPUT KITS
190512 (4 to 20mA)
190543 (0 to 5VDC)
190544 (0 to 1VDC)
J13-2
J13-1
J13-3
J13-4
J13-5
J13-6
J13-7
J13-8
"OPTIONAL" GAS GUARD KITS
190640 (CO2) or 190642 (N2)
PRESSURE SWITCH #1 (TANK EMPTY)
360213
PRESSURE SWITCH #2 (TANK EMPTY)
360213
SOLENOID, 3 WAY- 12VDC
250121
N.O.
N.C.
ELECTRICAL SCHEMATIC
MODEL:
MODULAR WATER JACKET
INCUBATOR 115 VOLT (DOM.)
3110-70-0-D REV.18
Page 2 of 3

77
78
79
80
81
82
83
84
85
86
87
88
89
90
91
92
93
94
95
96
97
98
99
100
101
102
103
104
105
106
107

WIRE REFERENCE CHART

NO.	GA.	COLOR	NO.	GA.	COLOR	NO.	GA.	COLOR
1	16	BROWN	26	22	YELLOW	52	N/U	
2	16	BLUE	27	22	YELLOW	53	20	PURPLE
3	16	GRN/YEL	28	22	GREEN	54	22/2	RED
3B	16	GREEN	29	22	GRAY	55	22/2	BLACK
4	18	BLACK	30	22	PURPLE	56	22	BLACK
5	18	BLACK	31	22	ORANGE	57		
6	18	WHITE	32	22/3	BLACK		N/U	
7	N/U		33	22/3	RED	66		
8	18	BROWN	34	22/3	WHITE	67	18	RED
9	18	BLUE	35	22/2	RED	68	18	ORANGE
10	18	YELLOW	36	22/2	BLACK	69	N/U	
11	18	YELLOW	37	22	BLACK	70	N/U	
12	18	BLACK	38	22/3	BLACK	71	22	BLUE
13	18	GREEN	39	22/3	RED	72	22	ORANGE
14	18	BLUE	40	22/3	GREEN	73	22	YELLOW
15	18	ORANGE	41	18	RED	74	22	BROWN
16	18	RED	42	18	BLACK	75	22	BLACK
17	18	GREEN	43	20	RED	76	22	RED
18	18	ORANGE	44	20	RED	77	22	GREEN
19	18	GREEN	45	20	BLUE	78		
20	18	ORANGE	46	20	BLUE		24/15	I/R CABLE
21	22	BROWN	47	20	ORANGE	91		
22	22	BLUE	48	20	ORANGE	92	22	BLACK
23	22	BLUE	49	20	BLACK	93	22	BROWN
24	22	RED	50	N/U		94	22	WHITE
25	22	RED	51	20	YELLOW			

N/U= Not Used

SENSOR REFERENCE VALUES

CO2 (290090) DIFFERENCE VOLTAGE OF 3-6MV/%CO2
J4-9 & J4-10 TO J4-9 & J4-11

RH (190643) J1-7 & J1-1 = 12VDC
J1-7 & J1-3 = 10MV/%RH

O2 (290083) J6-1 & J6-2 = 12MV @ 21%O2

MODEL	DESCRIPTION
3110	WATER JACKET INCUBATOR - TC CO2
3120	WATER JACKET INCUBATOR - IR CO2
3130	WATER JACKET INCUBATOR - TC O2
3140	WATER JACKET INCUBATOR - IR O2
3428	WATER JACKET INCUBATOR - TC CO2
3422	WATER JACKET INCUBATOR - IR CO2
3424	WATER JACKET INCUBATOR - TC O2
3426	WATER JACKET INCUBATOR - IR O2
3110GP	WATER JACKET INCUBATOR - TC CO2
3120GP	WATER JACKET INCUBATOR - IR CO2
3130GP	WATER JACKET INCUBATOR - TC O2
3140GP	WATER JACKET INCUBATOR - IR O2

NOTES:

⊛	Denotes Terminal Strip Connection	Parts List Reference Number	
	Last Relay Number	○	Assembly
	Last Terminal Number	⬠	Panel
	Last Wire Number	⬡	Refrigeration
→⊱	Denotes Pin & Socket Connection	□	Wiring

ELECTRICAL SCHEMATIC
MODEL:
MODULAR WATER JACKET
INCUBATOR 115 VOLT (DOM.)

3110-70-0-D REV.18
Page 3 of 3

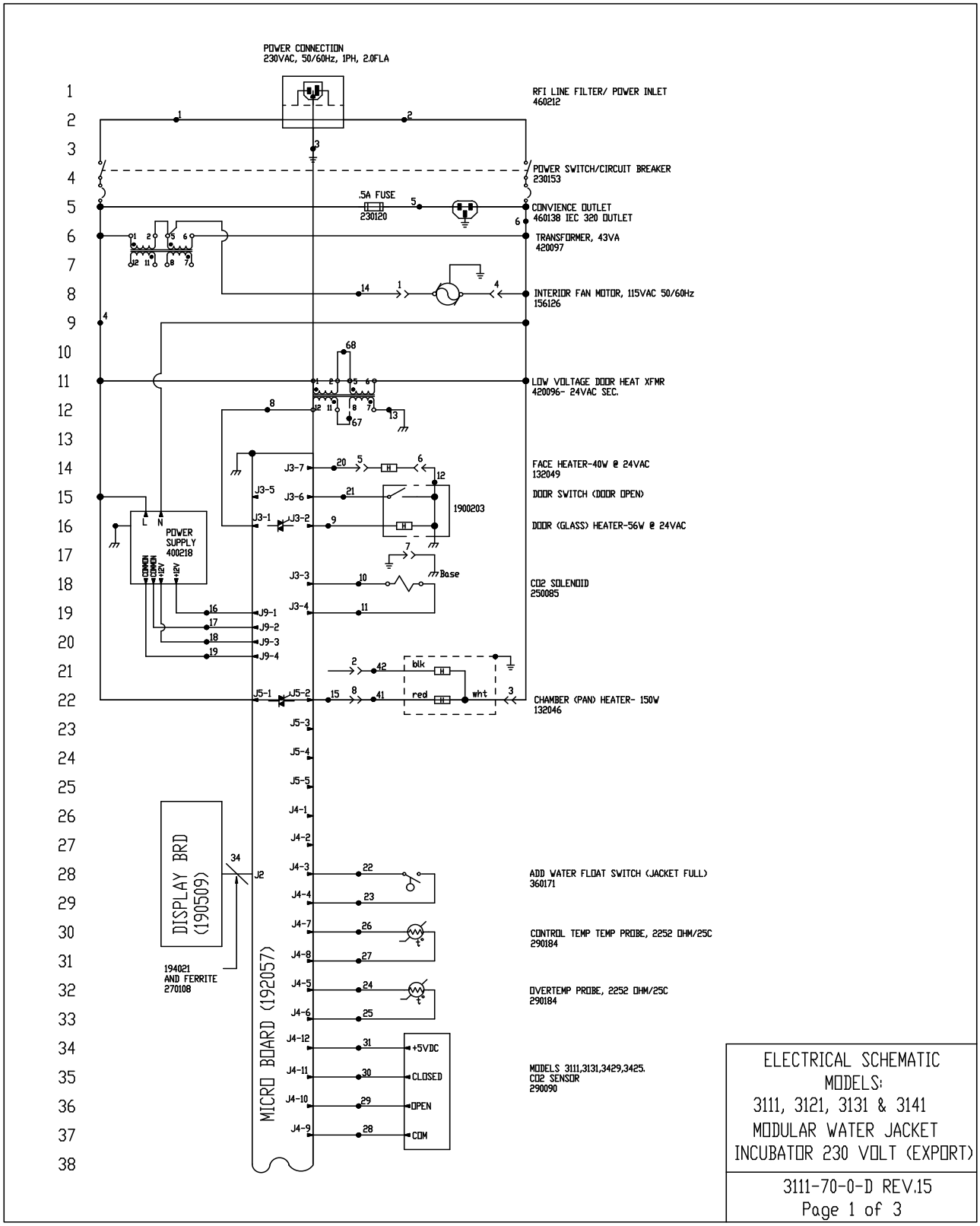
POWER CONNECTION
230VAC, 50/60Hz, 1PH, 2.0FLA
RFI LINE FILTER/ POWER INLET
460212
POWER SWITCH/CIRCUIT BREAKER
230153
.5A FUSE
230120
CONVIENCE OUTLET
460138 IEC 320 OUTLET
TRANSFORMER, 43VA
420097
INTERIOR FAN MOTOR, 115VAC 50/60Hz
156126
LOW VOLTAGE DOOR HEAT XFMR
420096- 24VAC SEC.
FACE HEATER-40W @ 24VAC
132049
DOOR SWITCH (DOOR OPEN)
1900203
DOOR (GLASS) HEATER-56W @ 24VAC
POWER SUPPLY
400218
CO2 SOLENOID
250085
CHAMBER (PAN) HEATER- 150W
132046
DISPLAY BRD
(190509)
194021
AND FERRITE
270108
MICRO BOARD (192057)
ADD WATER FLOAT SWITCH (JACKET FULL)
360171
CONTROL TEMP TEMP PROBE, 2252 OHM/25C
290184
OVERTEMP PROBE, 2252 OHM/25C
290184
MODELS 3111,3131,3429,3425.
CO2 SENSOR
290090
+5VDC
CLOSED
OPEN
COM
ELECTRICAL SCHEMATIC
MODELS:
3111, 3121, 3131 & 3141
MODULAR WATER JACKET
INCUBATOR 230 VOLT (EXPORT)
3111-70-0-D REV.15
Page 1 of 3

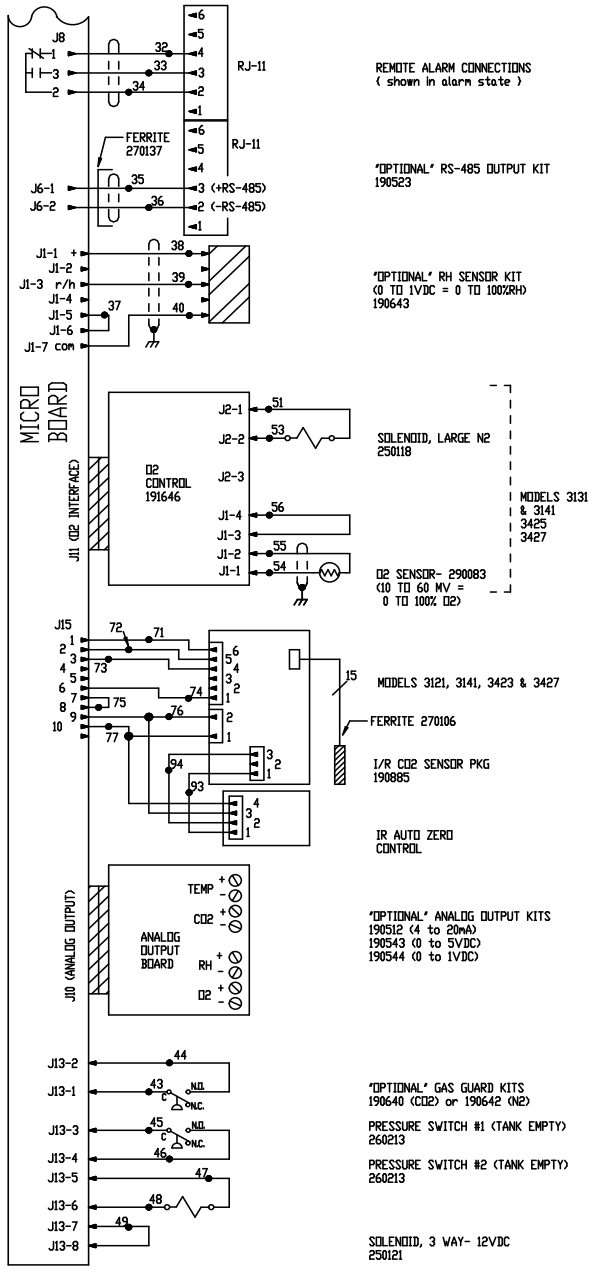

ELECTRICAL SCHEMATIC
MODELS:
3111, 3121, 3131 & 3141
MODULAR WATER JACKET
INCUBATOR 230 VOLT (EXPORT)

3111-70-0-D REV.15
Page 2 of 3

77
78
79
80
81
82
83
84
85
86
87
88
89
90
91
92
93
94
95
96
97
98
99
100
101
102
103
104
105
106
107

WIRE REFERENCE CHART

NO.	GA.	COLOR	NO.	GA.	COLOR	NO.	GA.	COLOR
1	16	BROWN	26	22	YELLOW	52	N/U	
2	16	BLUE	27	22	YELLOW	53	20	PURPLE
3	16	GRN/YEL	28	22	GREEN	54	22/2	RED
3B	16	GREEN	29	22	GRAY	55	22/2	BLACK
4	18	BLACK	30	22	PURPLE	56	22	BLACK
5	18	BLACK	31	22	ORANGE	57		
6	18	WHITE	32	22/3	BLACK		N/U	
7	N/U		33	22/3	RED	66		
8	18	BROWN	34	22/3	WHITE	67	18	RED
9	18	BLUE	35	22/2	RED	68	18	ORANGE
10	18	YELLOW	36	22/2	BLACK	69	N/U	
11	18	YELLOW	37	22	BLACK	70	22	BLACK
12	18	BLACK	38	22/3	BLACK	71	22	BLUE
13	18	GREEN	39	22/3	RED	72	22	ORANGE
14	18	BLUE	40	22/3	GREEN	73	22	YELLOW
15	18	ORANGE	41	18	RED	74	22	BROWN
16	18	RED	42	18	BLACK	75	22	BLACK
17	18	GREEN	43	20	RED	76	22	RED
18	18	ORANGE	44	20	RED	77	22	GREEN
19	18	GREEN	45	20	BLUE	78		I/R
20	18	ORANGE	46	20	BLUE		24/15	CABLE
21	22	BROWN	47	20	ORANGE	91		
22	22	BLUE	48	20	ORANGE	92	22	BLACK
23	22	BLUE	49	20	BLACK	93	22	BROWN
24	22	RED	50	N/U		94	22	WHITE
25	22	RED	51	20	YELLOW			

N/U= Not Used

SENSOR REFERENCE VALUES

CO2 (290090) DIFFERENCE VOLTAGE OF 3-6MV/%CO2
J4-9 & J4-10 TO J4-9 & J4-11

RH (190643) J1-7 & J1-1 = 12VDC
J1-7 & J1-3 = 10MV/%RH

O2 (290083) J6-1 & J6-2 = 12MV @ 21%O2

MODEL	DESCRIPTION
3111	WATER JACKET INCUBATOR - TC CO2
3121	WATER JACKET INCUBATOR - IR CO2
3131	WATER JACKET INCUBATOR - TC O2
3141	WATER JACKET INCUBATOR - IR O2
3429	WATER JACKET INCUBATOR - TC CO2 (THERMO 8000)
3423	WATER JACKET INCUBATOR - IR CO2 (THERMO 8000)
3425	WATER JACKET INCUBATOR - TC O2 (THERMO 8000)
3427	WATER JACKET INCUBATOR - IR O2 (THERMO 8000)
3111GP	WATER JACKET INCUBATOR - TC CO2 GENERAL PURPOSE
3121GP	WATER JACKET INCUBATOR - IR CO2 GENERAL PURPOSE
3131GP	WATER JACKET INCUBATOR - TC CO2 GENERAL PURPOSE
3141GP	WATER JACKET INCUBATOR - IR CO2 GENERAL PURPOSE

NOTES:

⊛	Denotes Terminal Strip Connection	Parts List Reference Number	
	Last Relay Number	○	Assembly
	Last Terminal Number	⬠	Panel
	Last Wire Number	⬡	Refrigeration
→⊱	Denotes Pin & Socket Connection	□	Wiring

ELECTRICAL SCHEMATIC
MODELS:
3111, 3121, 3131 & 3141
MODULAR WATER JACKET
INCUBATOR 230 VOLT (EXPORT)

3111-70-0-D REV.15
Page 3 of 3

THERMO FISHER SCIENTIFIC WATER JACKETED INCUBATOR WARRANTY USA*

The Warranty Period starts two weeks from the date your equipment is shipped from our facility. This allows shipping time so the warranty will go into effect at approximately the same time your equipment is delivered. The warranty protection extends to any subsequent owner during the first year warranty period.

During the first year, component parts proven to be non-conforming in materials or workmanship will be repaired or replaced at Thermo's expense, including labor. In addition, after the initial warranty period of one year, the CO2 sensor (IR) will be warranted for a second year, parts only. The CO2 sensor (T/C) will be warranted for four additional years for a total of five years, parts only. The water jacket chamber has a unit production lifetime warranty, parts only, against rust-through and leaks. Unit production life is defined as the period of time the current chamber design is in production, plus seven years. If corrosive chemicals are identified in the chamber, the warranty will be voided. Installation and calibration is not covered by this warranty agreement. The Technical Services Department must be contacted for warranty determination and direction prior to performance of any repairs. Expendable items, glass, filters and gaskets are excluded from this warranty.

Replacement or repair of components parts or equipment under this warranty shall not extend the warranty to either the equipment or to the component part beyond the original warranty period. The Technical Services Department must give prior approval for return of any components or equipment. At Thermo's option, all non-conforming parts must be returned to Thermo postage paid and replacement parts are shipped FOB destination.

THIS WARRANTY IS EXCLUSIVE AND IN LIEU OF ALL OTHER WARRANTIES, WHETHER WRITTEN, ORAL OR IMPLIED. NO WARRANTIES OF MERCHANTABILITY OR FITNESS FOR A PARTICULAR PURPOSE SHALL APPLY. Thermo shall not be liable for any indirect or consequential damages including, without limitation, damages relating to lost profits or loss of products.

Your local Thermo Sales Office is ready to help with comprehensive site preparation information before your equipment arrives. Printed instruction manuals carefully detail equipment installation, operation and preventive maintenance.

If equipment service is required, please call your Technical Services Department at l-800-438-4851 (USA and Canada) or 1-740-373-4763. We're ready to answer your questions on equipment warranty, operation, maintenance, service and special applications. Outside the USA, contact your local distributor for warranty information.

Rev. 6 4/09

ISO 9001 REGISTERED

THERMO FISHER SCIENTIFIC INTERNATIONAL WATER JACKETED INCUBATOR WARRANTY*

The Warranty Period starts two months from the date your equipment is shipped from our facility. This allows shipping time so the warranty will go into effect at approximately the same time your equipment is delivered. The warranty protection extends to any subsequent owner during the first year warranty period.

During the first year, component parts proven to be non-conforming in materials or workmanship will be repaired or replaced at Thermo's expense, excepting labor. In addition, after the initial warranty period of one year, the CO_2 sensor (IR) will be warranted for a second year, parts only. The CO_2 sensor (T/C) will be warranted for four additional years for a total of five years, parts only. The water jacket chamber has a unit production lifetime warranty, parts only, against rust-through or leaks. Unit production life is defined as the period of time the current chamber design is in production, plus seven years. If corrosive chemicals are identified in the chamber, the warranty will be voided. Installation and calibration is not covered by this warranty agreement. The Technical Services Department must be contacted for warranty determination and direction prior to performance of any repairs. Expendable items, glass, filters and gaskets are excluded from this warranty.

Replacement or repair of components parts or equipment under this warranty shall not extend the warranty to either the equipment or to the component part beyond the original warranty period. The Technical Services Department must give prior approval for return of any components or equipment. At Thermo's option, all non-conforming parts must be returned to Thermo postage paid and replacement parts are shipped FOB destination.

THIS WARRANTY IS EXCLUSIVE AND IN LIEU OF ALL OTHER WARRANTIES, WHETHER WRITTEN, ORAL OR IMPLIED. NO WARRANTIES OF MERCHANTABILITY OR FITNESS FOR A PARTICULAR PURPOSE SHALL APPLY. Thermo shall not be liable for any indirect or consequential damages including, without limitation, damages relating to lost profits or loss of products.

Your local Thermo Sales Office is ready to help with comprehensive site preparation information before your equipment arrives. Printed instruction manuals carefully detail equipment installation, operation and preventive maintenance.

If equipment service is required, please call your Technical Services Department at 1-800-438-4851 (USA and Canada) or 1-740-373-4763. We're ready to answer your questions on equipment warranty, operation, maintenance, service and special application. Outside the USA, contact your local distributor for warranty information.

Rev. 6 4/09

ISO 9001 REGISTERED

TURCK
Industrial Connectivity Products

picofast ® "Snap Lock" Connector Instructions

UNLOCK

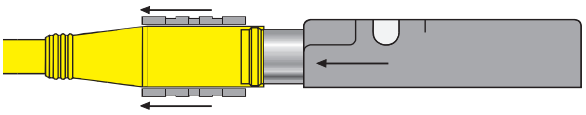

With TURCK's patented Locking Sleeve pulled back, any ***picofast*** sensor slides on without any difficulty.

LOCK

After sensor is connected, push Locking Sleeve forward to create a watertight connection. It's a snap!

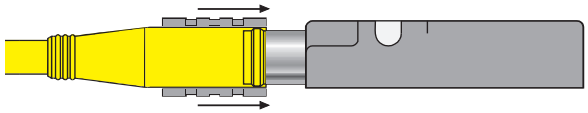

Installation Instructions

To Attach:

1. Be sure black locking sleeve is pulled back.

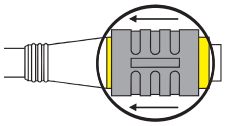

2. Line up pins and push connector onto plug. You will feel a "snap." Do not twist.

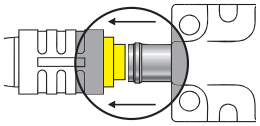

3. Push locking sleeve forward on connector until it is flush with the front of the connector.

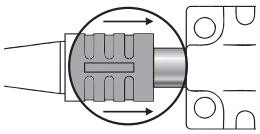

4. If sleeve is difficult to slide on a new connector, "exercise" it a few times. Do not use tools.

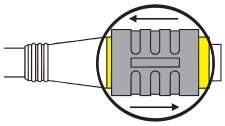

To Detach:

1. Do not twist.

2. Pull locking sleeve back to "unlocked" position.

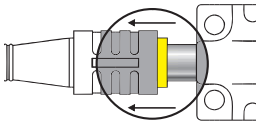

3. Pull connector straight off.

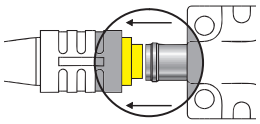

4. Leave locking sleeve in unlocked position.

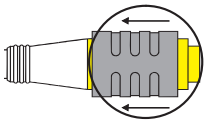

Clearwater Tech - Phone: 800.894.0412 - Fax: 208.368.0415 - Web: www.clrwtr.com - Email: info@clrwtr.com

thermoscientific.com

© 2023 Thermo Fisher Scientific Inc. All rights reserved. All trademarks are the property of Thermo Fisher Scientific and its ubsidiaries. Specifications, terms and pricing are subject to change. Not all products are available in all countries. Please consult your local sales representative for details.

Thermo Fisher Scientific (Asheville) LLC
401 Millcreek Road
Marietta, Ohio 45750

United States

Thermo
SCIENTIFIC
A Thermo Fisher Scientific Brand